任意的鑽尖角度及方式
Any angle and type of drill tip

任意的刃背、鑽背方式
Any way of land and
drill land

任意的芯厚大小、
容屑槽寬度、深度大小。
Any web thickness, width
of chip flute and depth.

不同顏色之色圈
different color ring

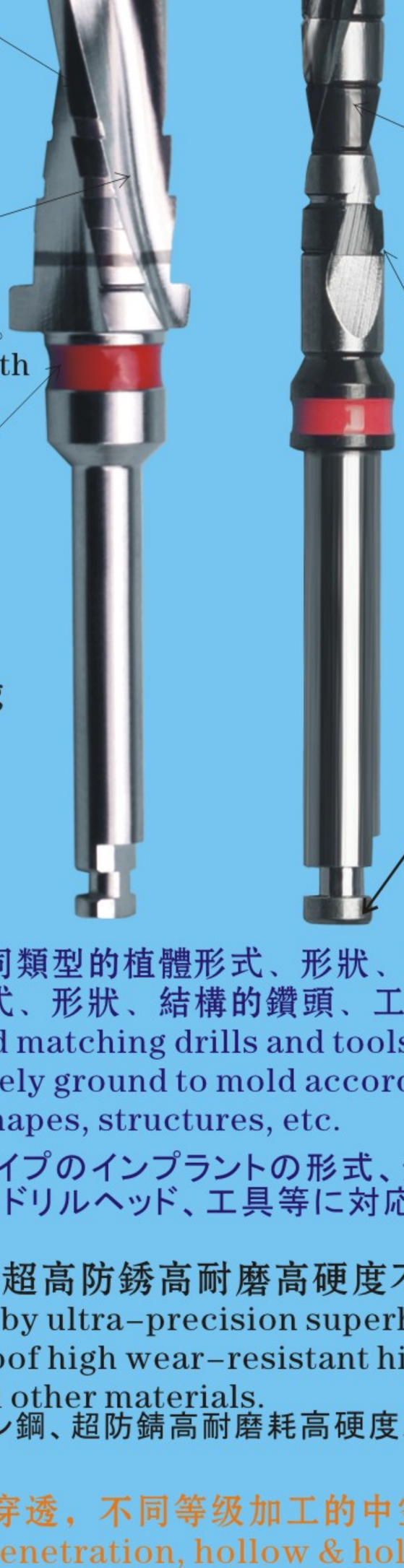

任意的刃部結構及高可至
±0.003mm（3μm）的尺寸公差。
Any structure of cutting edge with
size tolerance up to ±0.003mm（3μm）。

任意的刃口角度，超鋒利型、
一般鋒利型、微鈍化型.....
Any angle of cutting edge with super
sharp type ,generally sharp, a little
dull type ....

不同顏色之塗層（黑色&黃色爲主），
及不同程度的亞光/亮光處理
Different colors of coating (mostly Black & Yellow)
Different degrees of Matt/Shiny treatment
多色のコーティング（主に黒&黄色）、各レベルの
つや消し/光沢処理

分段標記
Marking

任意的柄部類型及高可至
±0.003mm（3μm）的尺寸公差
Any type of shank and dimension
tolerance up to ±0.003mm（3μm）

★、可依不同品牌、不同類型的植體形式、形狀、結構等，高精密研磨成型對應的、匹配相關的不同類型、形式、形狀、結構的鑽頭、工具等等。
Corresponding and matching drills and tools of different types, forms, shapes, structures can be high precisely ground to mold according to different brands and different types of implants forms, shapes, structures, etc.
各ブランド及び各タイプのインプラントの形式、形状、構造などに従って、高精密研磨成型で各タイプ、形式、形状、構造のドリルヘッド、工具等に対応できる。

★、可用陶瓷、鎢鋼、超高防銹高耐磨高硬度不銹鋼（AA）、鈦、鈦合金等材料超精超硬研磨成型。
It can be produced by ultra-precision superhard grinding to mold of ceramic, tungsten steel, superhigh rust-proof high wear-resistant high-hardness stainless steel (AA), titanium, titanium alloys and other materials.
セラミック、タングステン鋼、超防錆高耐磨耗高硬度ステンレス(AA)、チタン、チタン合金などの材質で超精密超硬研磨成型ができる。

※必要可带穿透&不穿透，不同等级加工的中空、空芯内孔加工。
With or without penetration, hollow & hollow core inner hole process with different grades.
必要に応じて、貫通付き&貫通なし、各レベル加工での中空、中空内穴加工。

★可超硬、超精研磨.任意的柄部類型.芯厚.容屑槽寬度.刃背方式.鑽尖方式.内冷却孔方式.刃部結構.刃口角度.刃口鋒利程度之要求.及高可至±0.003mm（3μm）的尺寸公差要求 We can produce with super hard and super finish grinding and satisfy your requirement of any type of shank, web thickness, width of chip flute, land, drill tip,inner cooling hole, structure of cutting edge, angle of cutting edge, degree of sharpness of cutting edge, and the dimension tolerance can be up to ±0.003mm（3μm）

★、可依要求生産不同刃部材料類型（陶瓷類、鎢鋼類、超高防銹高級品不銹鋼類(AA)、鈦及鈦合金類、常規標準防銹高耐磨不銹鋼(A).....等系列）
The cutting edge can be produced with different materials (ceramic, carbide, superhigh anti-rust and high wear resistant stainless steel (AA), Ti, Ti alloy, generally anti-rust and high wear resistant stainless steel (A) ... series)

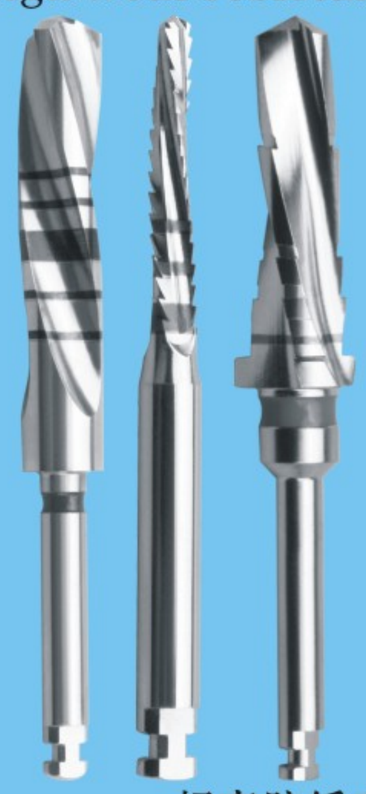

超高防銹高耐磨
不銹鋼（AA)
superhigh anti-rust and high wear resistant stainless steel (AA)

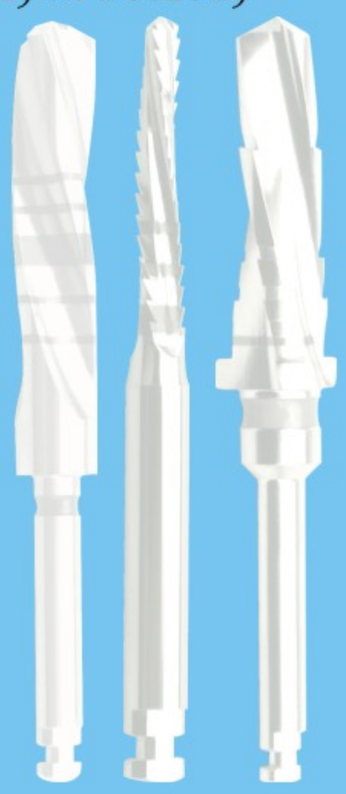

陶瓷
Ceramic

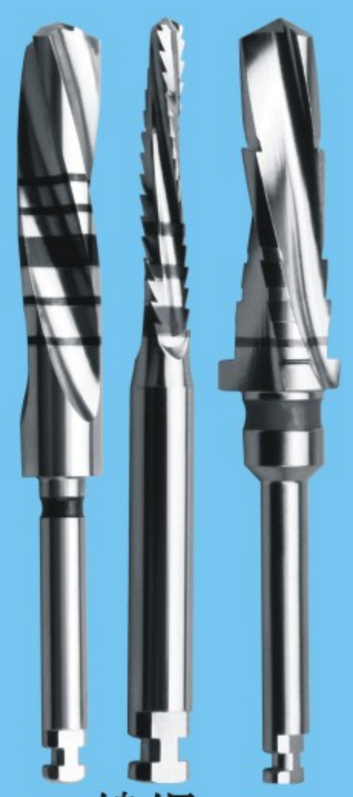

鎢鋼
carbide

※ 刃部加工等級:
AAA級: CNC超硬砂輪,鏡面研磨任意形狀之刃口,同心度◎,跳動↗,圓柱度⌭≤0.003mm(3μm),可任意的刃口鋒利程度。
A A級: CNC超硬砂輪,精研磨任意形狀之刃口,同心度◎,跳動↗,圓柱度⌭≤0.008mm(8μm),可任意的刃口鋒利程度。
A級 : CNC超硬砂輪,一般研磨任意形狀之刃口同心度◎,跳動↗,圓柱度⌭≤0.012mm(12μm),可任意的刃口鋒利程度。
B級 : CNC 車削加工+熱處理+抛光處理，較差的刃口鋒利性,同心度◎,跳動↗,圓柱度⌭（0.10~0.20mm）（100/μm~200/μm）
※ Cutting edge machining grades:
Class AAA: CNC super hard grinding wheel, mirror surface grinding for any shape of cutting edge.Concentricity ◎, runout ↗, cylindricity ⌭≤0.003mm(3μm),any sharpness of cutting edge.
Class A A: CNC super hard grinding wheel, finish grinding for any shape of cutting edge.Concentricity ◎, runout ↗, cylindricity ⌭≤0.008mm(8μm),any sharpness of cutting edge.
Class A : CNC super hard grinding wheel, general grinding for any shape of cutting edge.Concentricity ◎, runout ↗, cylindricity ⌭≤0.012mm(12μm),any sharpness of cutting edge.
Class B : CNC lathe work + heat treatment + polishing treatment, worse sharpness of cutting edge. Concentricity ◎, runout ↗, cylindricity ⌭(0.10~0.20mm) (100/μm~200/μm).。
*刃部材料類型:
1.超高防銹不銹鋼類(AA)(HRC54° ±2° 斷面)(常規常備)
2.常規標準防銹高耐磨不銹鋼類(A)(HRC45° ~64° 斷面)
3.鈦及鈦合金類(HRC35° ~42°)系列.
4.陶瓷類(HRA85° ~94°)系列,(HRC67° ~84°)系列.
5.鎢鋼類(HRA81° ~94°)系列,(HRC60° ~84°)系列.

Material of cutting edge:
1. ultra-high anti-rust high wear-resistant stainless steel(AA)(HRC54° ±2° Section)(regular stock)
2.general anti-rust high wear-resistant stainless steel(A)(HRC45° ~64° Section) series
3.Titanium and Titanium alloy (HRC35° ~42°) series
4.Ceramic (HRA85° ~94°)series, (HRC67° ~84°) series
5. Carbide (HRA81° ~94°) series, (HRC60° ~84°) series

※必要可带穿透&不穿透，不同等级加工的中空、空芯内孔加工。
With or without penetration, hollow & hollow core inner hole process with different grades.
必要に応じて、貫通付き&貫通なし、各レベル加工での中空、中空内穴加工。

★可超硬、超精研磨.任意的柄部類型.芯厚.容屑槽寬度.刃背方式.鑽尖方式.内冷却孔方式.刃部結構.刃口角度.刃口鋒利程度之要求.及高可至±0.003mm（3μm）的尺寸公差要求 We can produce with super hard and super finish grinding and satisfy your requirement of any type of shank, web thickness, width of chip flute, land, drill tip,inner cooling hole, structure of cutting edge, angle of cutting edge, degree of sharpness of cutting edge, and the dimension tolerance can be up to ±0.003mm（3μm）

（超高防銹高耐磨（AA）&高精密特殊非標成型）
(unltra-high anti-rust(AA)&high precision special nonstandard forming)
超防錆高耐磨耗(AA)&高精密特殊非標準成型

常用骨屑收集、骨粉堆積至槽頂的集屑鑽、積骨鑽、擴孔系列參考：
常規常備材料：超高防銹高耐磨不銹鋼（AA）（HRC54° ±2° 斷面)

Chip collector, Bone deposition drill and reamer series commonly used for skeletal fragment collection and bone powder accumulation to the crest as reference:

Regular stock material: Ultra-high anti-rust & high wear-resistant stainless steel (AA) (HRC54° ±2° Section)



深槽至頂、可堆屑至槽頂。（可黑色、黄色、全亞光、全亮光、部分亞光+部分亮光等表面處理）

Deep groove to top, chip accumulation to the crest. (It can be with black, yellow, full matt, full shiny, partial matt + partial shiny and other surface treatment)

麻花式、深槽至頂、螺旋刃
Twist, deep groove to top, spiral edge

(所有刃處均全精研磨)
(All edges are fully finish ground)

2刃(階梯、錐度均可）
2-flute (It can be step or taper.)



3刃(階梯、錐度均可）
3-flute (It can be step or taper.)



4刃(階梯、錐度均可）
4-flute (It can be step or taper.)

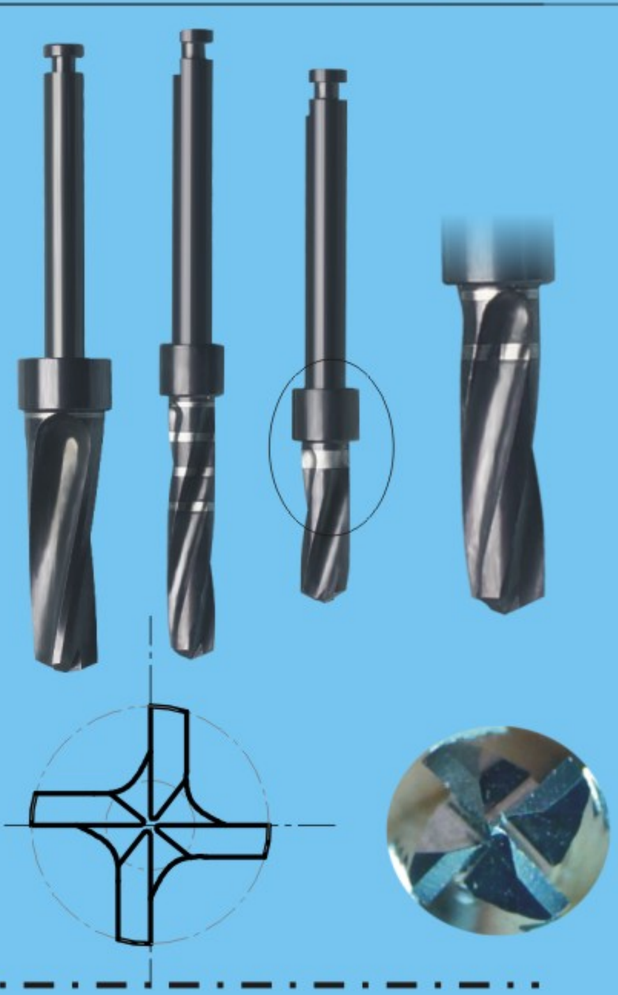

① 2刃常用規格系列：刃徑Φ0.80mm～Φ5.50mm之間系列任意尺寸之規格
3刃常用規格系列：刃徑Φ0.80mm～Φ6.40mm之間系列任意尺寸之規格
4刃常用規格系列：刃徑Φ2.0mm～Φ7.95mm之間系列任意尺寸之規格(需批量訂做)

② 所有刃數常規刃長長可至55mm系列，總長可至65mm系列的任意階梯、錐度角度、形狀、鋒利性要求加工的。

③常規爲10° ~12° 螺旋刃，可爲鋒利螺旋刃、擠光螺旋刃、鈍化螺旋刃或前鋒利後鈍化螺旋刃等結構方式。

① 2-flute commonly-used specification: Any size series of edge diameter between Φ0.80mm ~ Φ5.50mm
3-flute commonly-used specification: Any size series of edge diameter betweenΦ0.80mm ~ Φ6.40mm
4-flute commonly-used specification: Any size series of edge diameter between Φ2.0mm ~ Φ7.95mm
(Mass customized)

② The series with regular number of flutes, but cutting length up to 55mm and total length up to 65mm, processed with any step, taper angle, shape, sharpness requirements.

③ The conventional 10° ~12° helical edge can be sharp, burnishing, passivated, or front-sharp but rear-blunt.

★可超硬、超精研磨.任意的柄部類型.芯厚.容屑槽寬度.刃背方式.鑽尖方式.内冷却孔方式.刃部結構.刃口角度.刃口鋒利程度之要求.及高可至±0.003mm（3μm）的尺寸公差要求 We can produce with super hard and super finish grinding and satisfy your requirement of any type of shank, web thickness, width of chip flute, land, drill tip,inner cooling hole, structure of cutting edge, angle of cutting edge, degree of sharpness of cutting edge, and the dimension tolerance can be up to ±0.003mm（3μm）

（超高防銹高耐磨（AA）&高精密特殊非標成型）
(unltra-high anti-rust(AA)&high precision special nonstandard forming)
超防錆高耐磨耗(AA)&高精密特殊非標準成型

常用骨屑收集、骨粉堆積至槽頂的集屑鑽、積骨鑽、擴孔系列參考：
常規常備材料：超高防銹高耐磨不銹鋼（AA）（HRC54° ±2° 斷面）

Chip collector, Bone deposition drill and reamer series commonly used for skeletal fragment collection and bone powder accumulation to the crest as reference:
Regular stock material: Ultra-high anti-rust & high wear-resistant stainless steel (AA) (HRC54° ±2° Section)



深槽至頂、可堆屑至槽頂。（可黑色、黃色、全亞光、全亮光、部分亞光+部分亮光等表面處理）

Deep groove to top, chip accumulation to the crest. (It can be with black, yellow, full matt, full shiny, partial matt + partial shiny and other surface treatment)

寬槽至頂、直槽直刃系列
Wide groove to top, straight groove straight-flute series

(所有刃處均全精研磨)
(All edges are fully finish ground)

4刃、帶頂角刃型
4-flute, edge with vertex angle

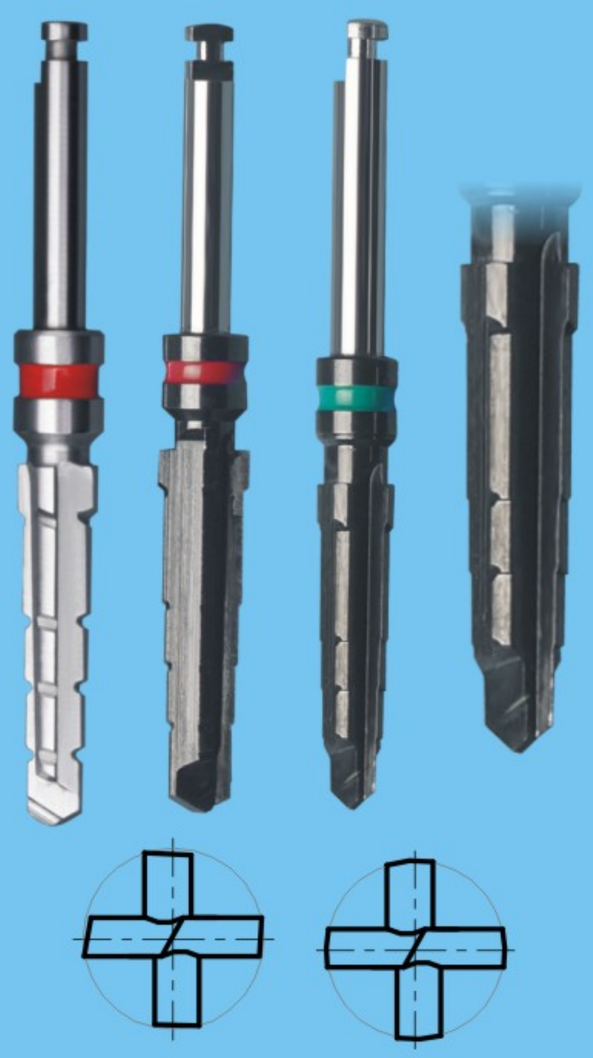

① 刃徑常用系列:
Φ0.80mm ~ Φ6.40mm
之間系列任意尺寸之規格。
② 常規刃長長可至55mm系列，總長可至65mm的任意階梯、錐度角度、形狀、鋒利性要求加工的。

① Commonly-used edge diameter: any size series between Φ0.80mm ~ Φ6.40mm
② Conventional cutting length up to 55mm series, and total length up to 65mm, processed with any step, taper angle, shape, sharpness requirements

3刃、大開口型
3-flute, large opening type

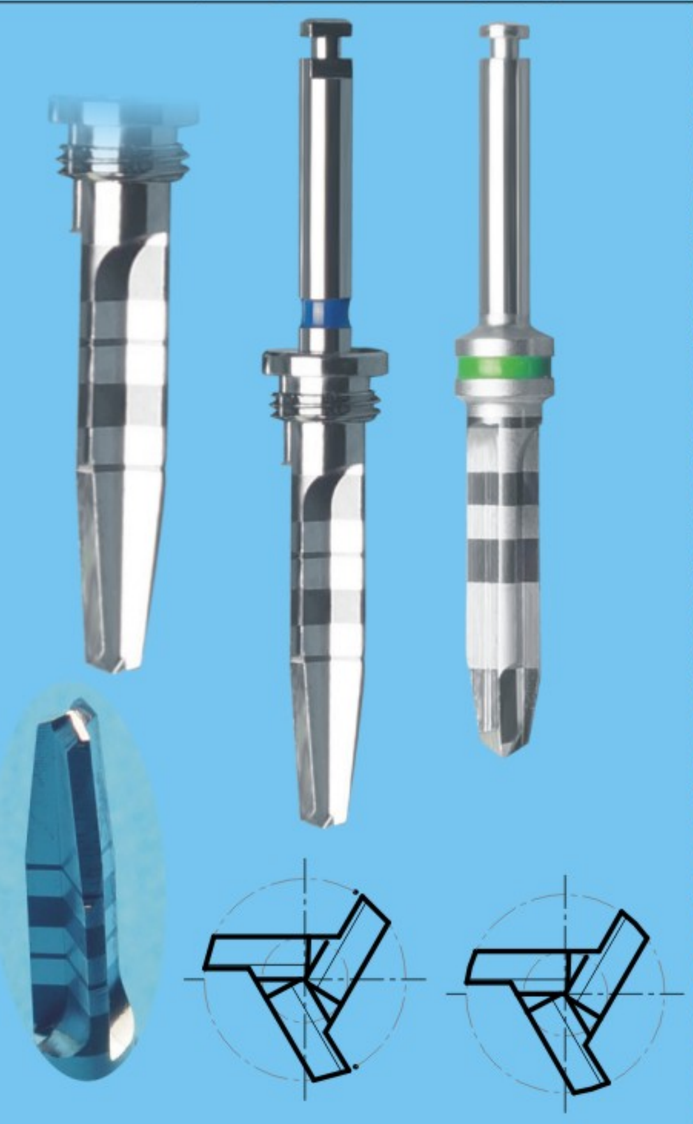

① 刃徑常用系列:
Φ0.80mm ~ Φ5.50mm
之間系列任意尺寸之規格。
② 常規刃長長可至55mm系列，總長可至65mm系列的任意階梯、錐度角度、形狀、鋒利性要求加工的。

① Commonly-used edge diameter: any size series between Φ0.80mm ~ Φ5.50mm
② Conventional cutting length up to 55mm series, and total length up to 65mm, processed with any step, taper angle, shape, sharpness requirements

4刃、擴孔式型
4-flute, reaming type

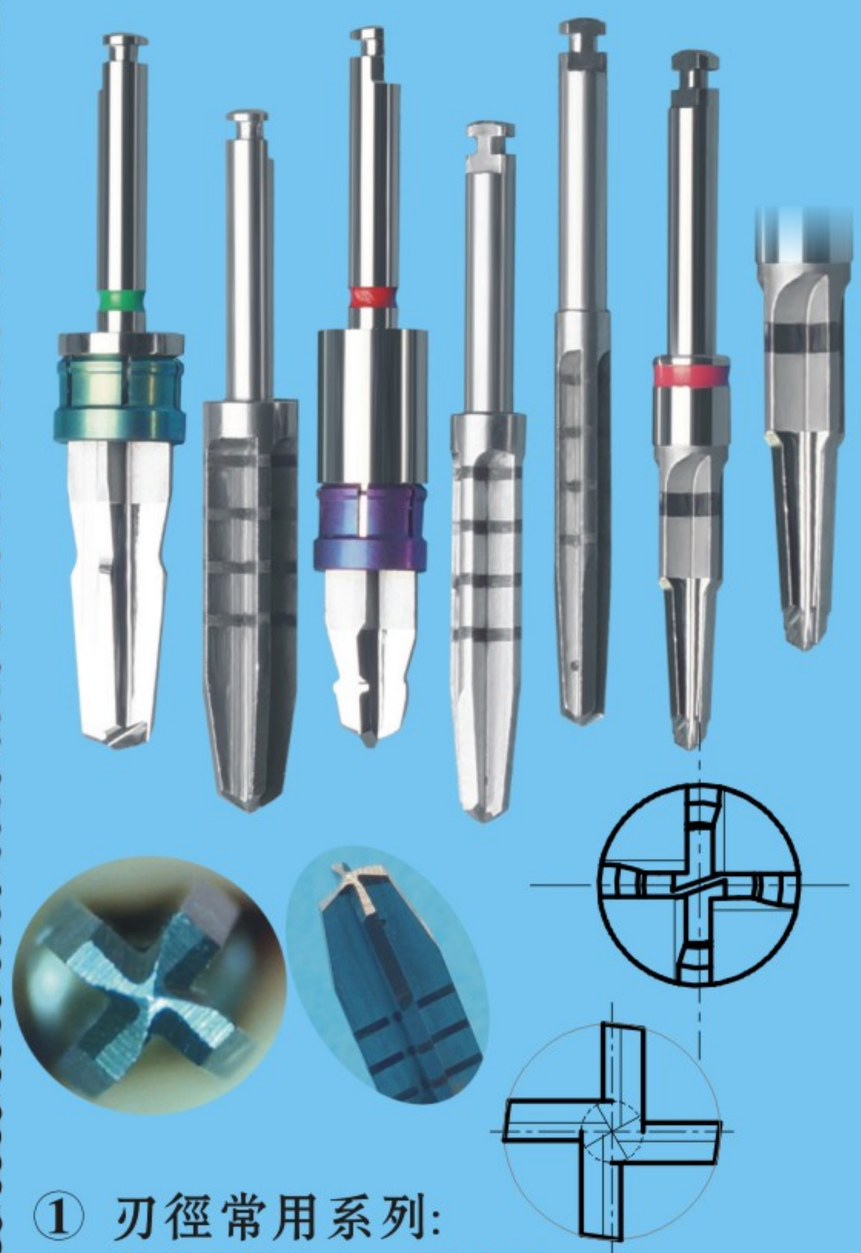

① 刃徑常用系列:
Φ0.80mm ~ Φ6.40mm
之間系列任意尺寸之規格。
② 常規刃長長可至55mm系列，總長可至65mm的任意階梯、錐度角度、形狀、鋒利性要求加工的。

① Commonly-used edge diameter: any size series between Φ0.80mm ~ Φ6.40mm
② Conventional cutting length up to 55mm series, and total length up to 65mm, processed with any step, taper angle, shape, sharpness requirements

★可超硬、超精研磨，任意的柄部類型、芯厚、容屑槽寬度、刃背方式、鑽尖方式、內冷却孔方式、刃部結構、刃口角度、刃口鋒利程度之要求，及高可至±0.003mm（3μm）的尺寸公差要求 We can produce with super hard and super finish grinding and satisfy your requirement of any type of shank, web thickness, width of chip flute, land, drill tip,inner cooling hole, structure of cutting edge, angle of cutting edge, degree of sharpness of cutting edge, and the dimension tolerance can be up to ±0.003mm（3μm）

（超高防銹高耐磨（AA）&高精密特殊非標成型）
(unltra-high anti-rust(AA)&high precision special nonstandard forming)
超防錆高耐磨耗(AA)&高精密特殊非標準成型

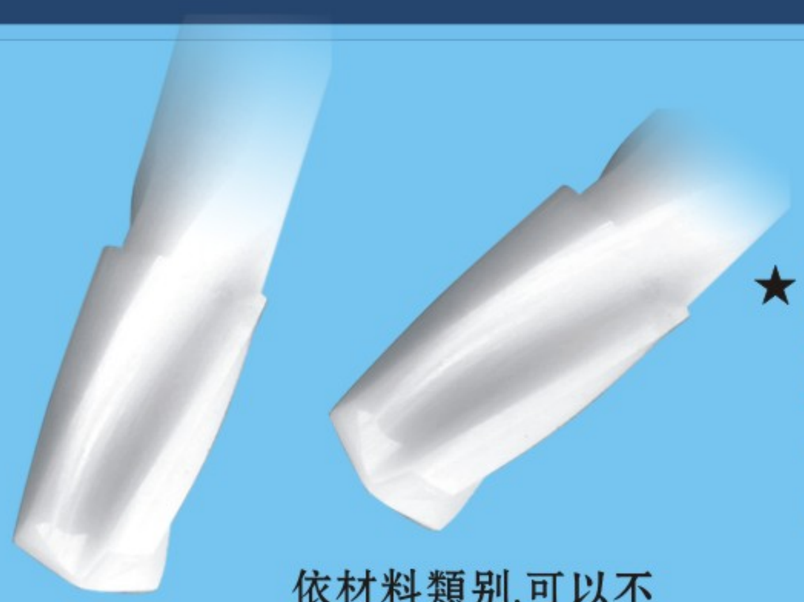

依材料類別,可以不同的差异的颜色
Different colors for different materials

★ 陶瓷類（HRA85° ~94°)系列，（HRC67° ~84°)系列。
Ceramic (HRA85° ~94°) series, (HRC67° ~84°) series.

★ 陶瓷類，手術中晶瑩剔透，超級美觀，不崩刃下，刃口鋒利性保持時間超長;在不崩刃下,鋒利性耐磨度是高耐磨不銹鋼類的10~30倍，但由于脆性大，抗崩刃性低，安全性較差，一般用于要求高端的、經驗豐富者使用，且普及性低，成本也會較高。
（清潔清洗需單支作業，以免磕碰而崩刃）
Ceramics, crystal clear in surgery, super-beautiful. If not tipping, cutting edge sharpness hold time is super long, and its sharpness & abradability are 10~30 times higher than that of high wear resistant stainless steel. But due to big brittleness, poor chipping resistance, so less secure, generally used for high-end requirement by experienced doctors, also low penetration and relatively high cost.
(The drill cleaning should be operated one by one to avoid bumping and chipping)

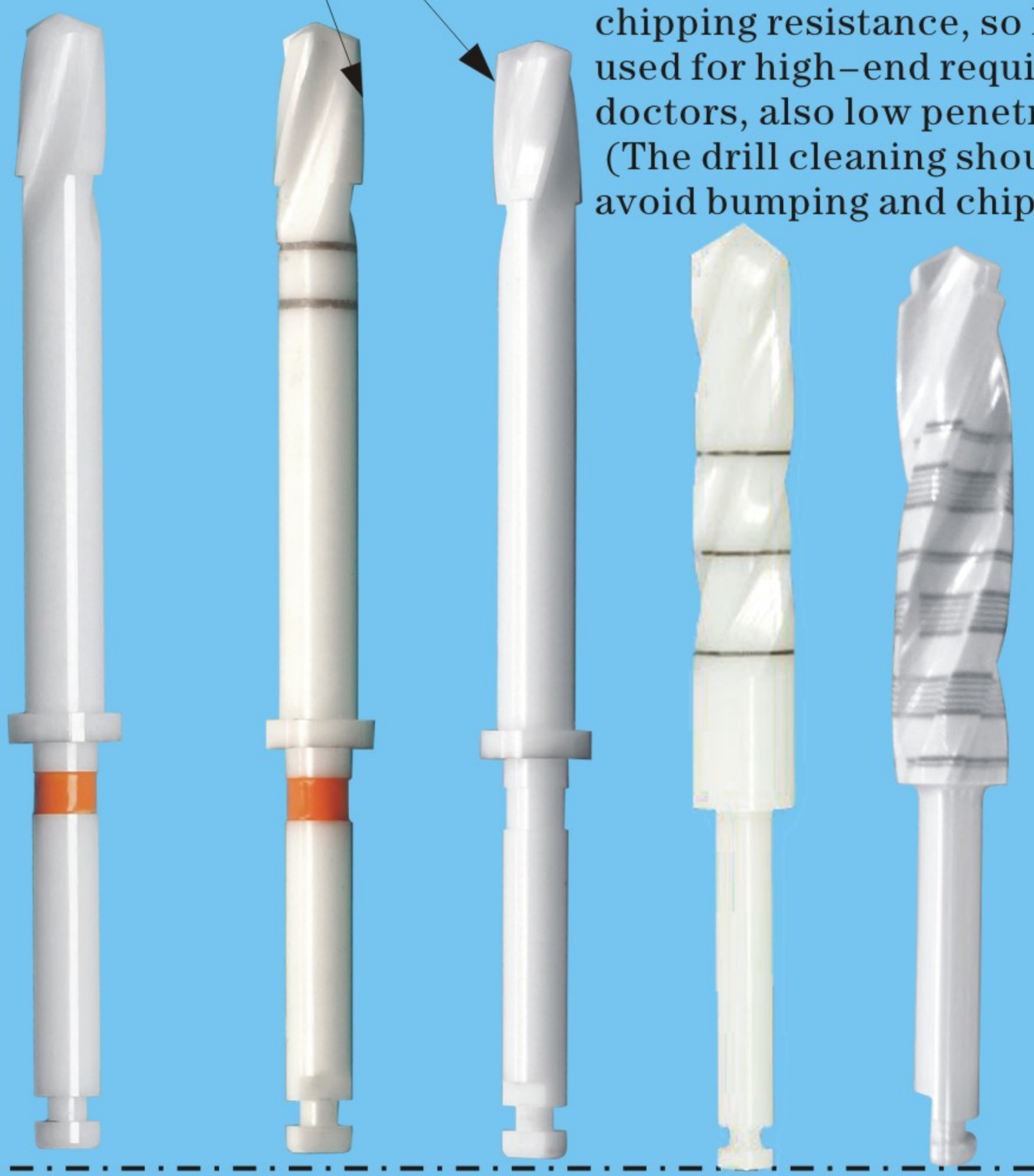

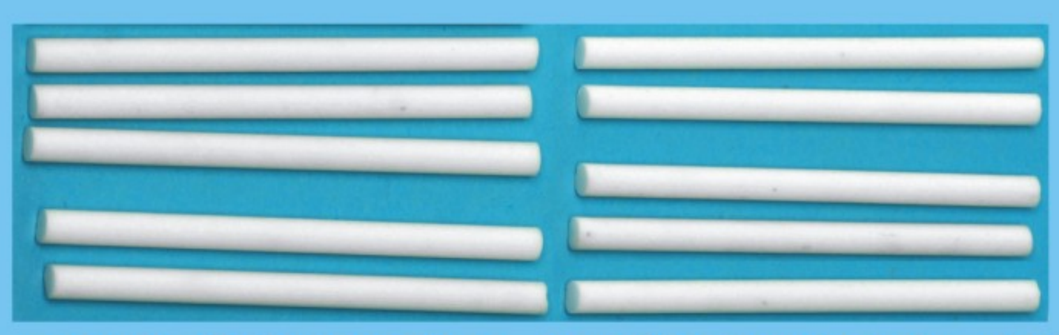



❊必要可带穿透&不穿透，不同等级加工的中空、空芯内孔加工。
With or without penetration, hollow & hollow core inner hole process with different grades.
必要に応じて、貫通付き&貫通なし、各レベル加工での中空、中空内穴加工。

★可超硬、超精研磨.任意的柄部類型.芯厚.容屑槽寬度.刃背方式.鑽尖方式.内冷却孔方式.刃部結構.刃口角度.刃口鋒利程度之要求.及高可至±0.003mm（3μm）的尺寸公差要求 We can produce with super hard and super finish grinding and satisfy your requirement of any type of shank, web thickness, width of chip flute, land, drill tip,inner cooling hole, structure of cutting edge, angle of cutting edge, degree of sharpness of cutting edge, and the dimension tolerance can be up to ±0.003mm（3μm）

LZQ

★ 陶瓷類（HRA85°~94°）系列，(HRC67°~84°)系列。
Ceramic (HRA85°~94°) series, (HRC67°~84°) series.

★ 陶瓷類，手術中晶瑩剔透，超級美觀，不崩刃下，刃口鋒利性保持時間超長;在不崩刃下，鋒利性耐磨度是高耐磨不銹鋼類的10~30倍，但由于脆性大，抗崩刃性低，安全性較差，一般用于要求高端的、經驗豐富者使用，且普及性低，成本也會較高。
（清潔清洗需單支作業，以免磕碰而崩刃）

Ceramics, crystal clear in surgery, super-beautiful. If not tipping, cutting edge sharpness hold time is super long, and its sharpness & abradability are 10~30 times higher than that of high wear resistant stainless steel. But due to big brittleness, poor chipping resistance, so less secure, generally used for high-end requirement by experienced doctors, also low penetration and relatively high cost.
(The drill cleaning should be operated one by one to avoid bumping and chipping)

セラミック類は手術の際、澄みきって、見栄えがよい。刃こぼれが無ければ、刃の鋭利さが長時間で維持できる;刃こぼれが無ければ、鋭利さと耐磨耗度が高耐磨耗ステンレス類の10~30倍である。但し、脆性が大きいため、刃こぼれが発生しやすくて、安全性が低い。一般的には、ハイレベル且つ経験豊富な医師に利用され、普及度が低いほか、コストも高い。(刃こぼれを防ぐために、洗浄の時、一本ずつ作業を行う必要がある)

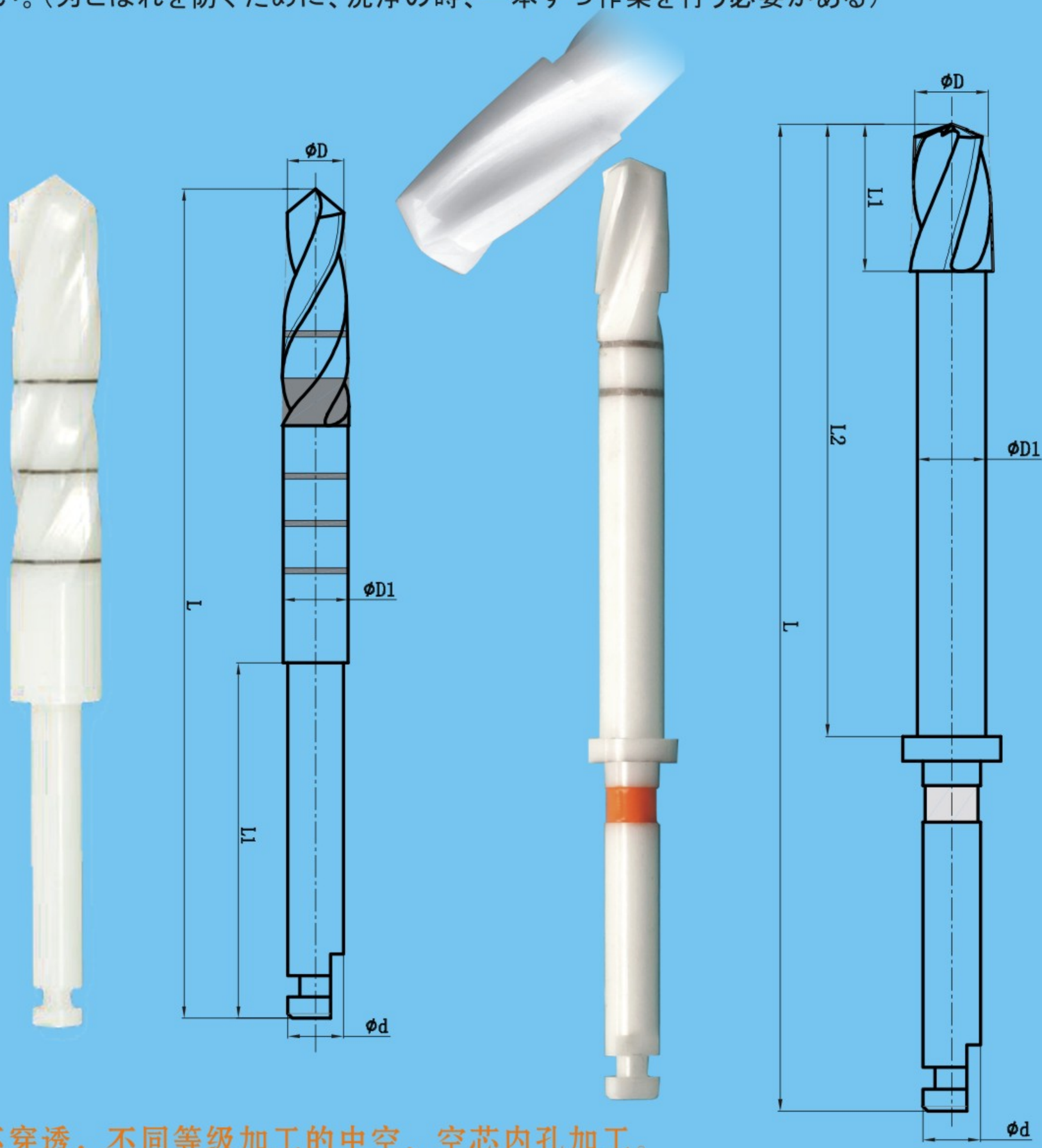

※必要可带穿透&不穿透，不同等级加工的中空、空芯内孔加工。
With or without penetration, hollow & hollow core inner hole process with different grades.
必要に応じて、貫通付き&貫通なし、各レベル加工での中空、中空内穴加工。

★可超硬、超精研磨. 任意的柄部類型. 芯厚. 容屑槽寬度. 刃背方式. 鑽尖方式. 内冷却孔方式. 刃部結構. 刃口角度. 刃口鋒利程度之要求. 及高可至±0.003mm（3μm）的尺寸公差要求 We can produce with super hard and super finish grinding and satisfy your requirement of any type of shank, web thickness, width of chip flute, land, drill tip,inner cooling hole, structure of cutting edge, angle of cutting edge, degree of sharpness of cutting edge, and the dimension tolerance can be up to ±0.003mm（3μm）

醫用工具及配件系列(陶瓷鑽頭)
Medical tools and parts series(Ceramic Drill)
医療器具及び部品シリーズ（セラミックドリルヘッド）

（超高防銹高耐磨（AA）&高精密特殊非標成型）
(unltra-high anti-rust(AA)&high precision special nonstandard forming)
超防錆高耐磨耗(AA)&高精密特殊非標準成型

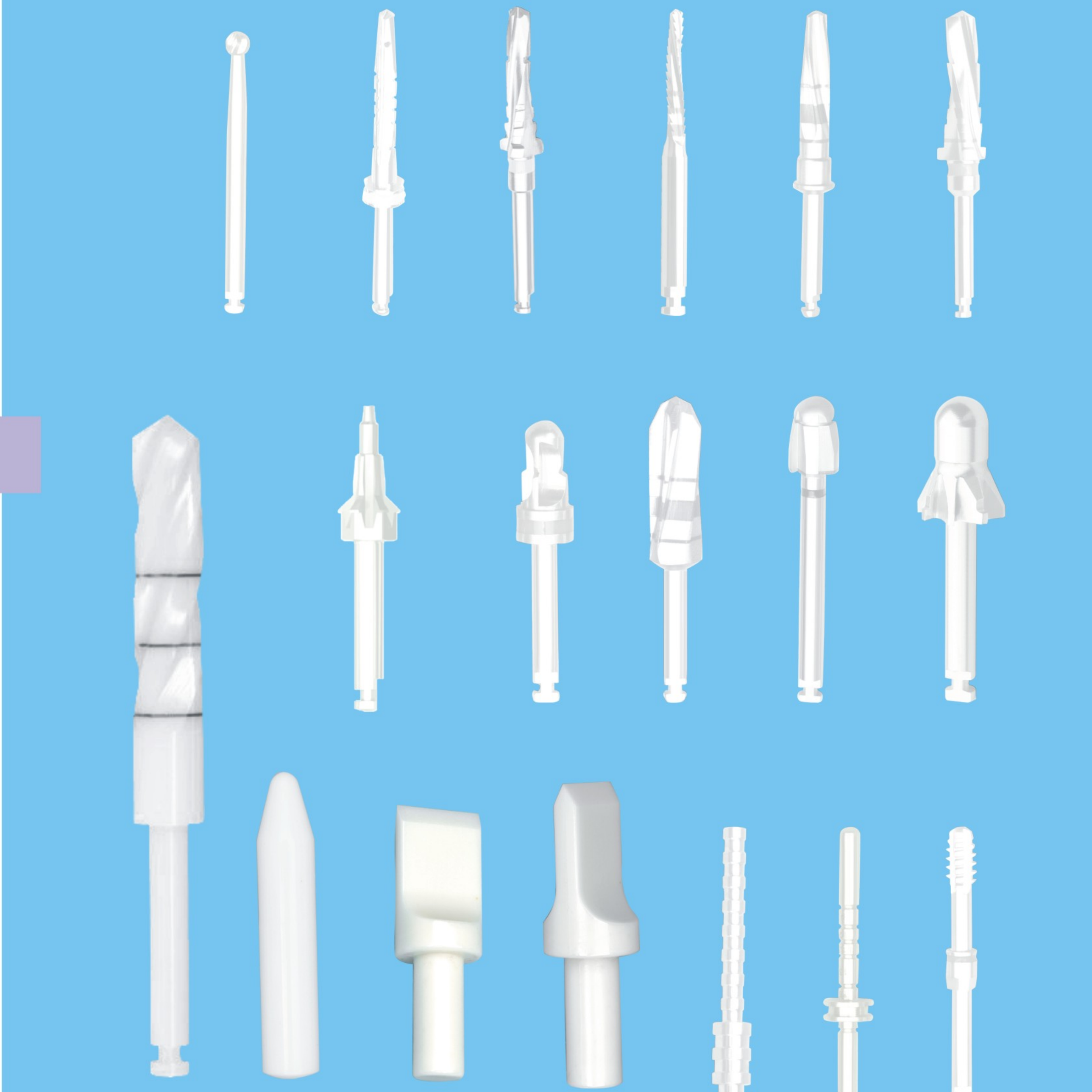

※必要可带穿透&不穿透，不同等级加工的中空、空芯内孔加工。
With or without penetration, hollow & hollow core inner hole process with different grades.
必要に応じて、貫通付き&貫通なし、各レベル加工での中空、中空内穴加工。

★可超硬、超精研磨.任意的柄部類型.芯厚.容屑槽寬度.刃背方式.鑽尖方式.内冷却孔方式.刃部結構.刃口角度.刃口鋒利程度之要求.及高可至±0.003mm（3μm）的尺寸公差要求 We can produce with super hard and super finish grinding and satisfy your requirement of any type of shank, web thickness, width of chip flute, land, drill tip,inner cooling hole, structure of cutting edge, angle of cutting edge, degree of sharpness of cutting edge, and the dimension tolerance can be up to ±0.003mm（3μm）

LZQ

采用六軸五聯動CNC磨削中心(AA)精研磨之微細錐度鑽頭，高同心度、高鋒利性、高銳利性

adopt 6 axis 5 motion CNC grinding center(AA) fine grinding to micro conical drill, with high concentricity and high sharpness.

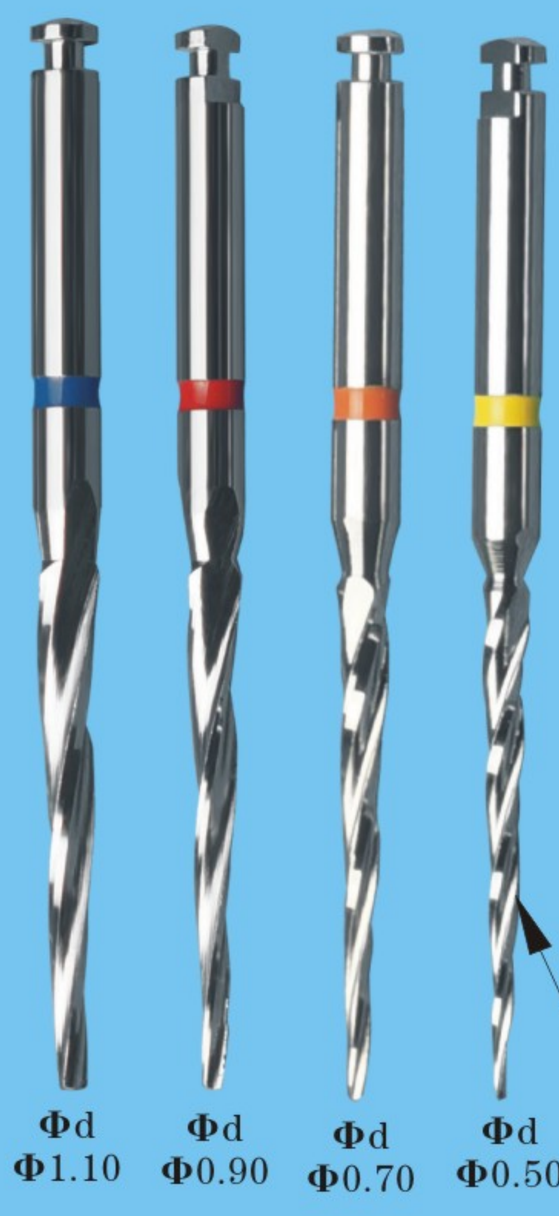

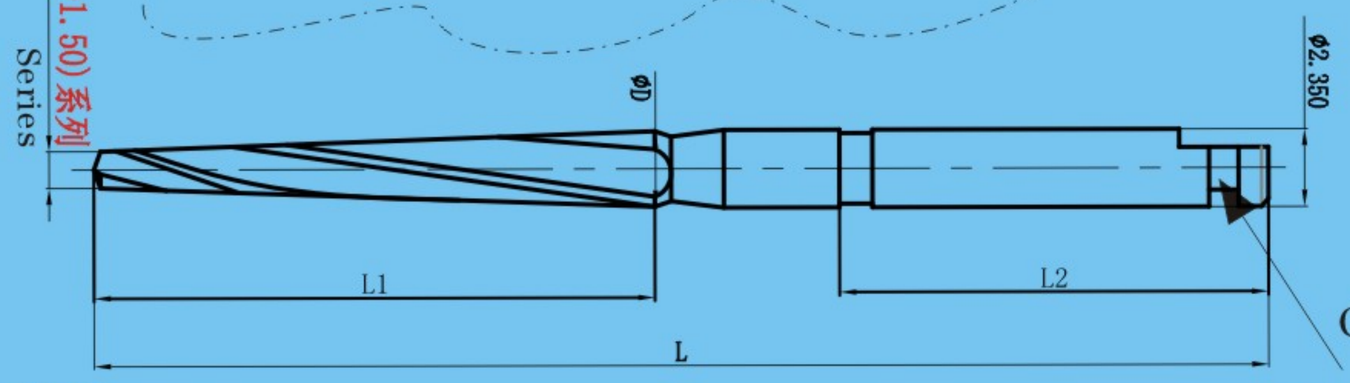

材料:
① 超高防銹高耐磨不銹鋼(AA)(HRC54° ±2° 斷面)(常規常備)
② 超高回彈性，低耐磨不銹鋼（AA）

Material
① ultra-high anti-rust high wear-resistant stainless steel（AA）（HRC54° ±2° Section)(regular stock)
② ultra-high elasticity，low wear-resistant stainless steel（AA）

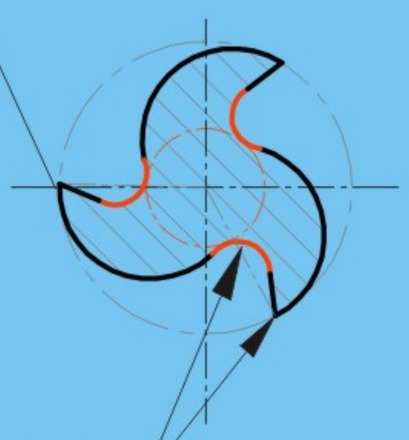

六軸五聯動CNC磨削中心,超鋒利之刃口超硬精研磨成型.
超高鋒利刃、不堵屑、不粘屑、不發熱。

6-axis 5-linkage CNC grinding center, super-sharp cutting edge super-hard finish grinding profiling.
ultra-high sharp edge, no blocking chips, no heating

部分尺寸(AA）(常規常備)some sizes(AA)(regular stock)



刃徑Φd Diameter	0.50	0.70	0.90	1.10
刃徑ΦD Diameter	1.69	1.89	2.09	2.29
刃長L1 Length of cut	17.05	17.05	17.05	17.05
柄徑 Shank Dia.	2.35	2.35	2.35	2.35
總長L Overall length	35.65	35.65	35.65	35.65
刃數Z No. of flute	3	3	3	3



纖維柱預備鑽、根管預備鑽、根管鑽、根管擴充鑽、直綫通路車針、修復治療鑽、

Fiber Post Drill、Root Canal Preparation Drill、Root Canal Drill、 Root Canal Expanding Drill、Straight wire access pin
Restoration drill



※必要可带不穿透，不同等级加工的中空、空芯内孔加工。
Without penetration, hollow & hollow core inner hole process with different grades.
必要に応じて、貫通なし、各レベル加工での中空、中空内穴加工。

★可超硬、超精研磨.任意的柄部類型.芯厚.容屑槽寬度.刃背方式.鑽尖方式.内冷却孔方式.刃部結構.刃口角度.刃口鋒利程度之要求.及高可至±0.003mm（3μm）的尺寸公差要求 We can produce with super hard and super finish grinding and satisfy your requirement of any type of shank, web thickness, width of chip flute, land, drill tip,inner cooling hole, structure of cutting edge, angle of cutting edge, degree of sharpness of cutting edge, and the dimension tolerance can be up to ±0.003mm（3μm）

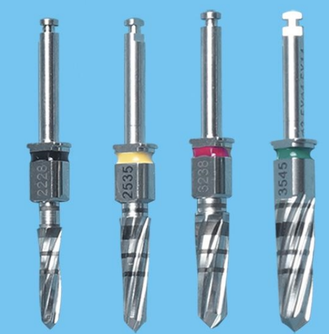

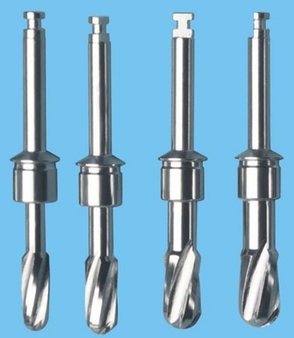

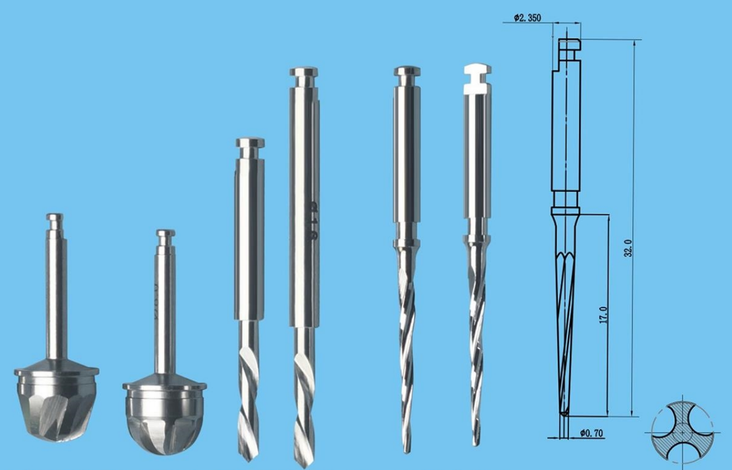

❊必要可带穿透&不穿透，不同等级加工的中空、空芯内孔加工。
With or without penetration, hollow & hollow core inner hole process with different grades.
必要に応じて、貫通付き&貫通なし、各レベル加工での中空、中空内穴加工。

★可超硬、超精研磨. 任意的柄部類型. 芯厚. 容屑槽寬度. 刃背方式. 鑽尖方式. 內冷却孔方式. 刃部結構. 刃口角度. 刃口鋒利程度之要求. 及高可至±0.003mm（3μm）的尺寸公差要求 We can produce with super hard and super finish grinding and satisfy your requirement of any type of shank, web thickness, width of chip flute, land, drill tip,inner cooling hole, structure of cutting edge, angle of cutting edge, degree of sharpness of cutting edge, and the dimension tolerance can be up to ±0.003mm（3μm）

醫用工具及配件系列（平骨鑽）
Medical tools and parts series(Flat bone drill)
医療器具及び部品シリーズ(平骨ドリル)

（超高防銹高耐磨（AA）&高精密特殊非標成型）
(unltra-high anti-rust(AA)&high precision special nonstandard forming)
超防錆高耐磨耗(AA)&高精密特殊非標準成型

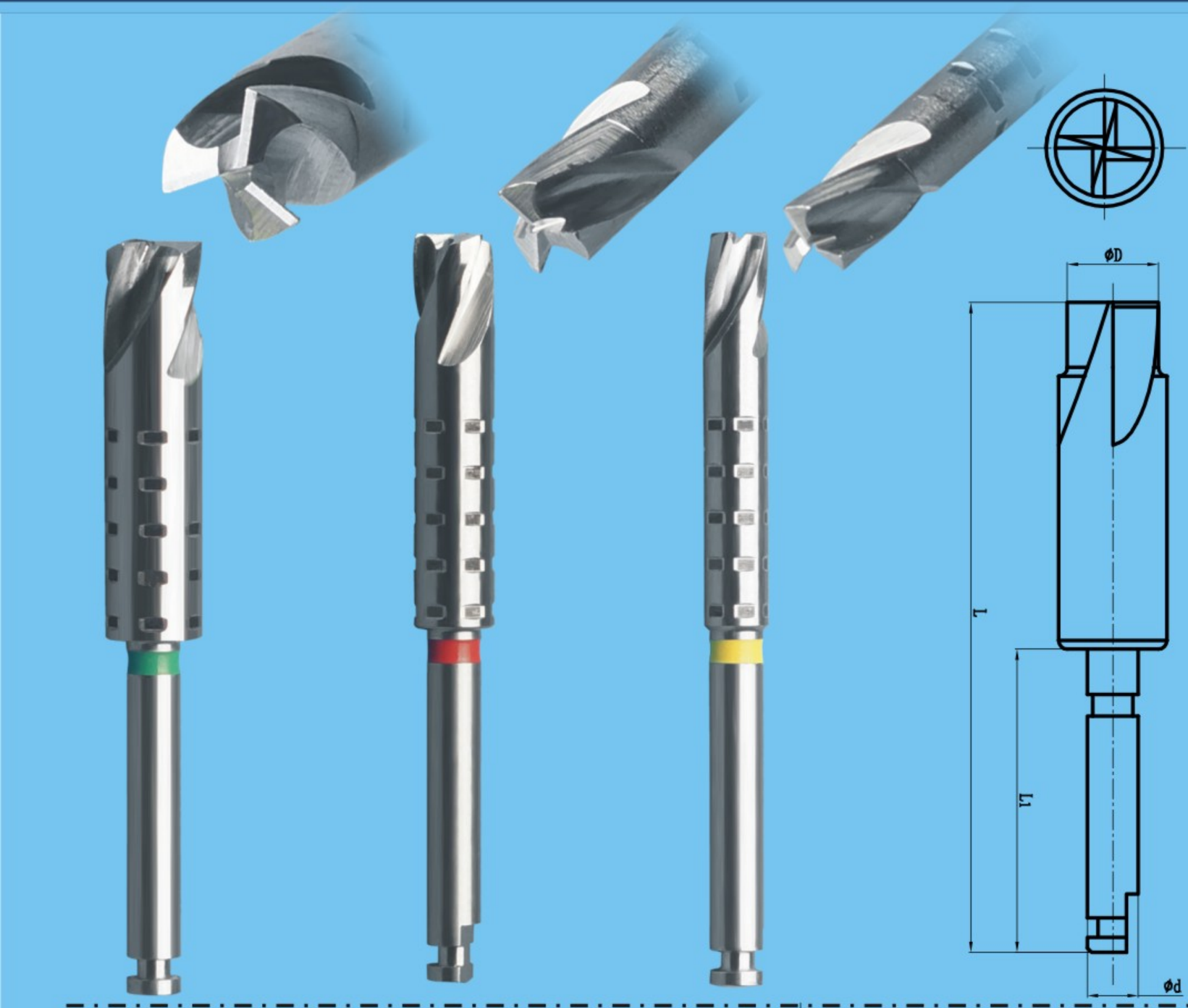





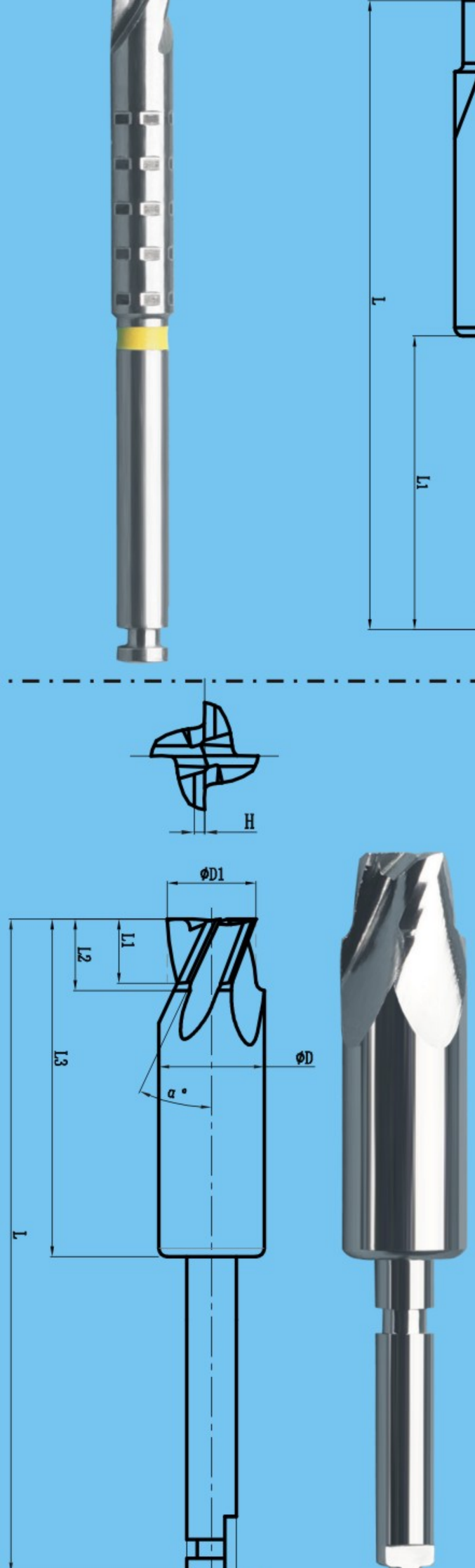



※必要可带穿透&不穿透，不同等级加工的中空、空芯内孔加工。
With or without penetration, hollow & hollow core inner hole process with different grades.
必要に応じて、貫通付き&貫通なし、各レベル加工での中空、中空内穴加工。

★可超硬、超精研磨.任意的柄部類型.芯厚.容屑槽寬度.刃背方式.鑽尖方式.内冷却孔方式.刃部結構.刃口角度.刃口鋒利程度之要求.及高可至±0.003mm（3μm）的尺寸公差要求 We can produce with super hard and super finish grinding and satisfy your requirement of any type of shank, web thickness, width of chip flute, land, drill tip,inner cooling hole, structure of cutting edge, angle of cutting edge, degree of sharpness of cutting edge, and the dimension tolerance can be up to ±0.003mm（3μm）

醫用工具及配件系列(鑽頭)
Medical tools and parts series(Drill)
医療器具及び部品シリーズ(ドリルヘッド)

（超高防銹高耐磨（AA）&高精密特殊非標成型）
(unltra-high anti-rust(AA)&high precision special nonstandard forming)
超防錆高耐磨耗(AA)&高精密特殊非標準成型

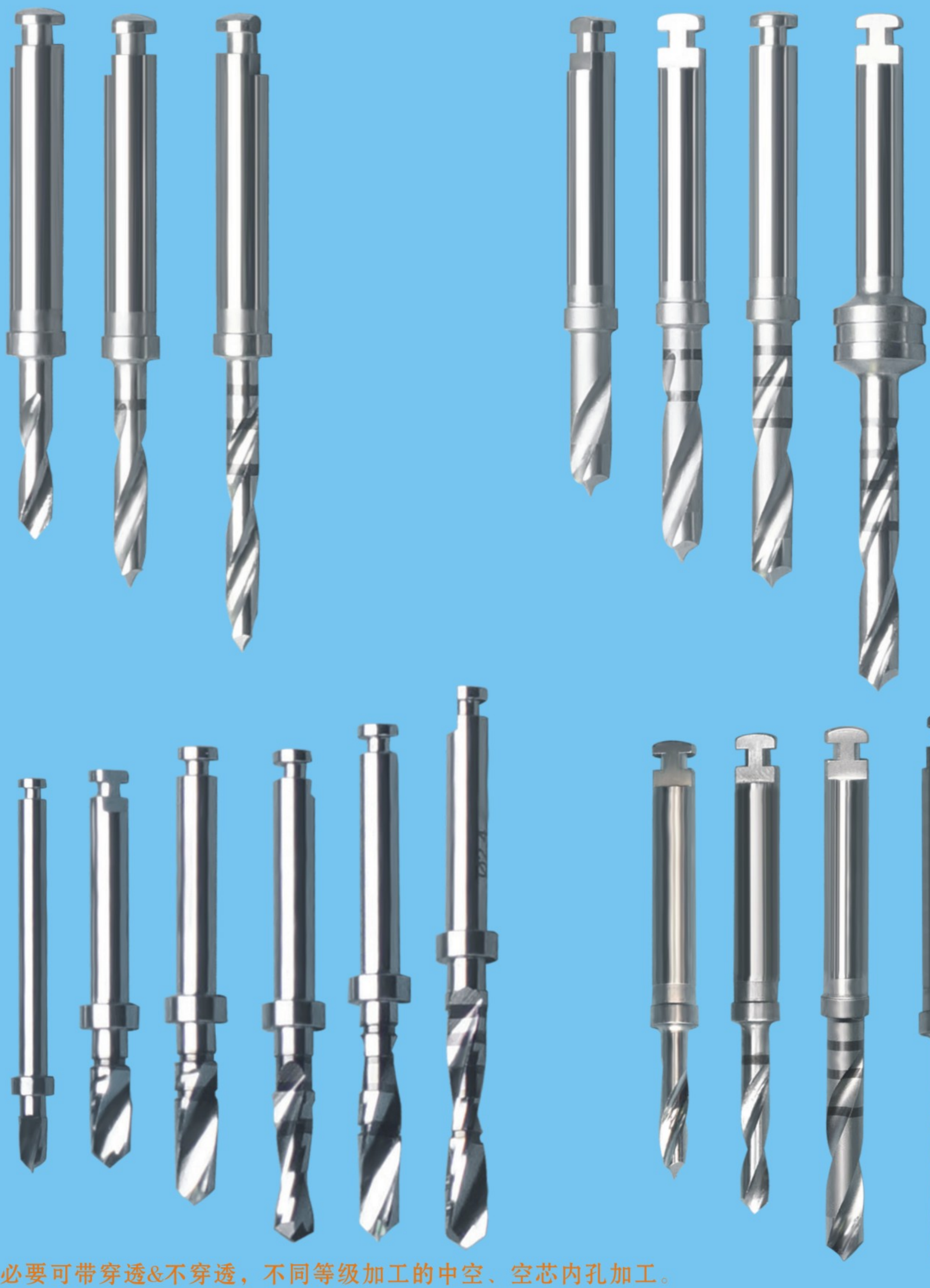

※必要可带穿透&不穿透，不同等级加工的中空、空芯内孔加工。
With or without penetration, hollow & hollow core inner hole process with different grades.
必要に応じて、貫通付き&貫通なし、各レベル加工での中空、中空内穴加工。

★可超硬、超精研磨.任意的柄部類型.芯厚.容屑槽寬度.刃背方式.鑽尖方式.内冷却孔方式.刃部結構.刃口角度.刃口鋒利程度之要求.及高可至±0.003mm（3μm）的尺寸公差要求 We can produce with super hard and super finish grinding and satisfy your requirement of any type of shank, web thickness, width of chip flute, land, drill tip,inner cooling hole, structure of cutting edge, angle of cutting edge, degree of sharpness of cutting edge, and the dimension tolerance can be up to ±0.003mm（3μm）

LZQ

醫用工具及配件系列(顴骨鑽頭)
Medical tools and parts series(Zygomatic drill)
医療器具及び部品シリーズ(ほお骨ドリルヘッド)

（超高防銹高耐磨（AA）&高精密特殊非標成型）
(unltra-high anti-rust(AA)&high precision special nonstandard forming)
超防錆高耐磨耗(AA)&高精密特殊非標準成型

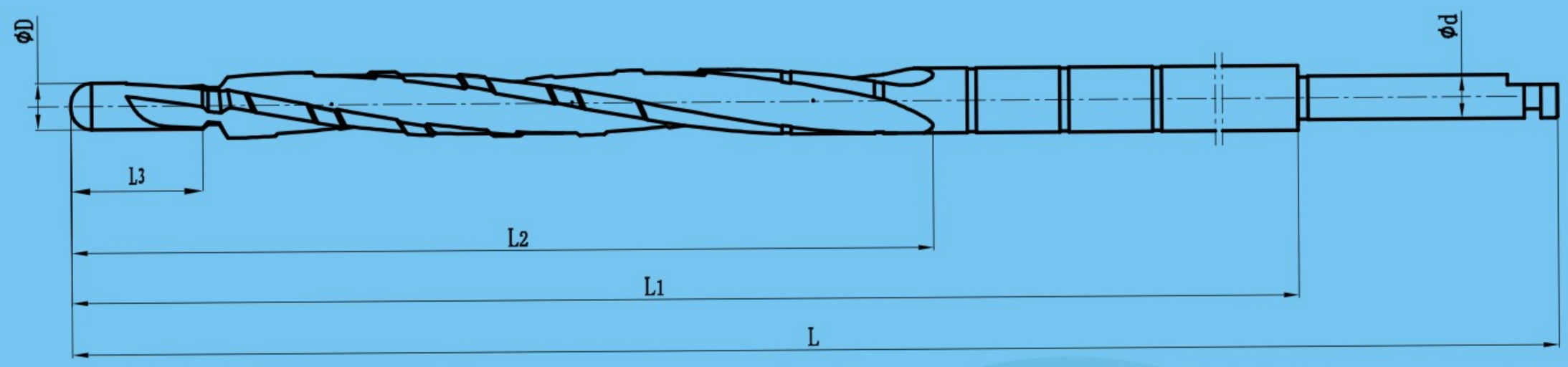



※必要可带穿透&不穿透，不同等级加工的中空、空芯内孔加工。
With or without penetration, hollow & hollow core inner hole process with different grades.
必要に応じて、貫通付き&貫通なし、各レベル加工での中空、中空内穴加工。

★可超硬、超精研磨.任意的柄部類型.芯厚.容屑槽寬度.刃背方式.鑽尖方式.内冷却孔方式.刃部結構.刃口角度.刃口鋒利程度之要求.及高可至±0.003mm（3μm）的尺寸公差要求 We can produce with super hard and super finish grinding and satisfy your requirement of any type of shank, web thickness, width of chip flute, land, drill tip,inner cooling hole, structure of cutting edge, angle of cutting edge, degree of sharpness of cutting edge, and the dimension tolerance can be up to ±0.003mm（3μm）

醫用工具及配件系列(引導鑽頭)
Medical tools and parts series(Guide drill)
医療器具及び部品シリーズ(ガイドドリルヘッド)

（超高防銹高耐磨（AA）&高精密特殊非標成型）
(unltra-high anti-rust(AA)&high precision special nonstandard forming)
超防錆高耐磨耗(AA)&高精密特殊非標準成型

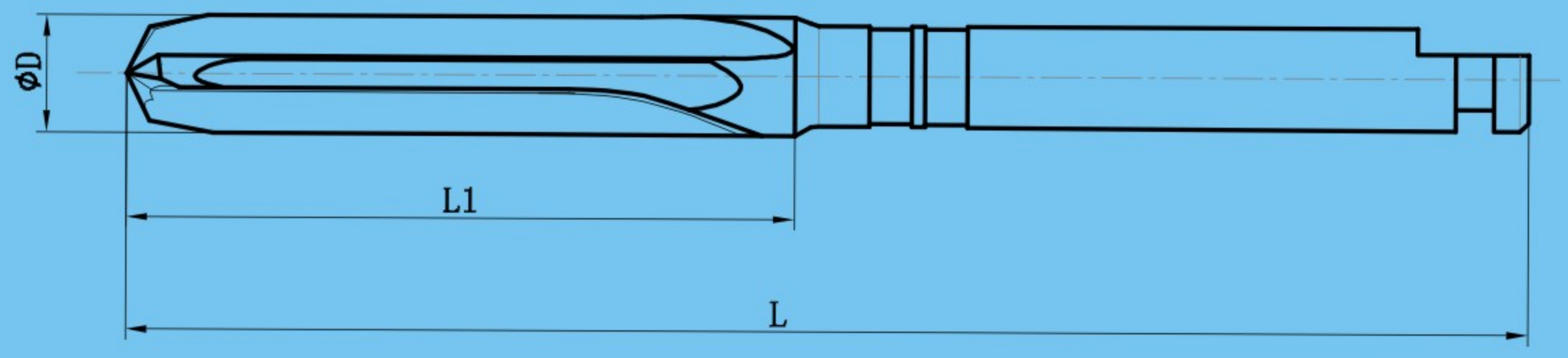

部分尺寸 some size

刃徑ΦD Diameter	2.8	2.8	3.5	3.5	4.2	4.2
刃長L1 Length of cut	15	20	15	20	15	20
柄徑Φd Shank Dia.	2.35	2.35	2.35	2.35	2.35	2.35
總長L Overall length	33	41	33	41	33	41
刃數Z No. of flute	3	3	3	3	3	3

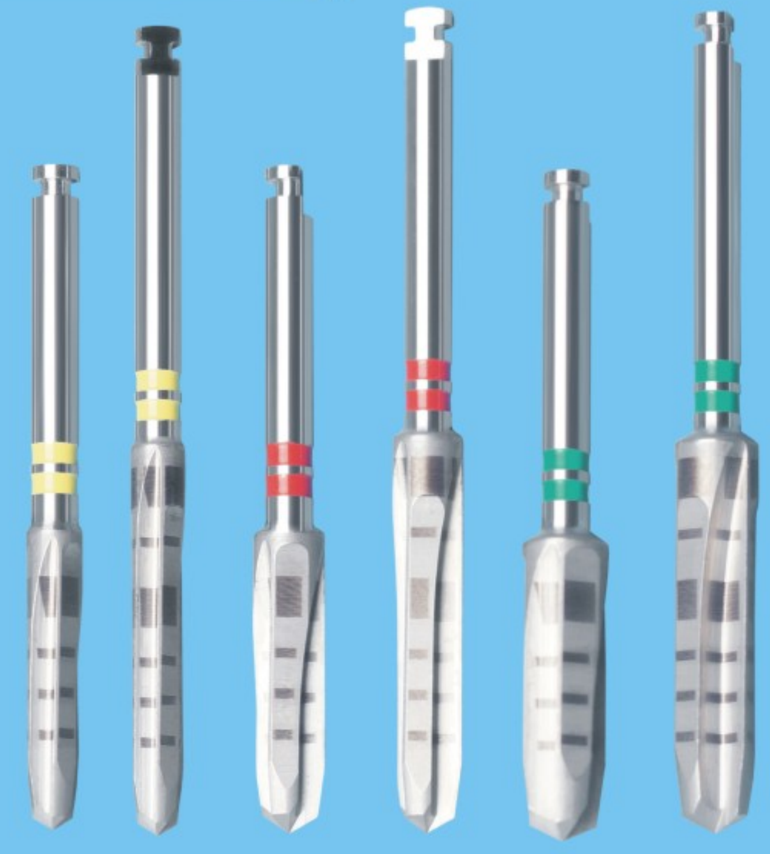

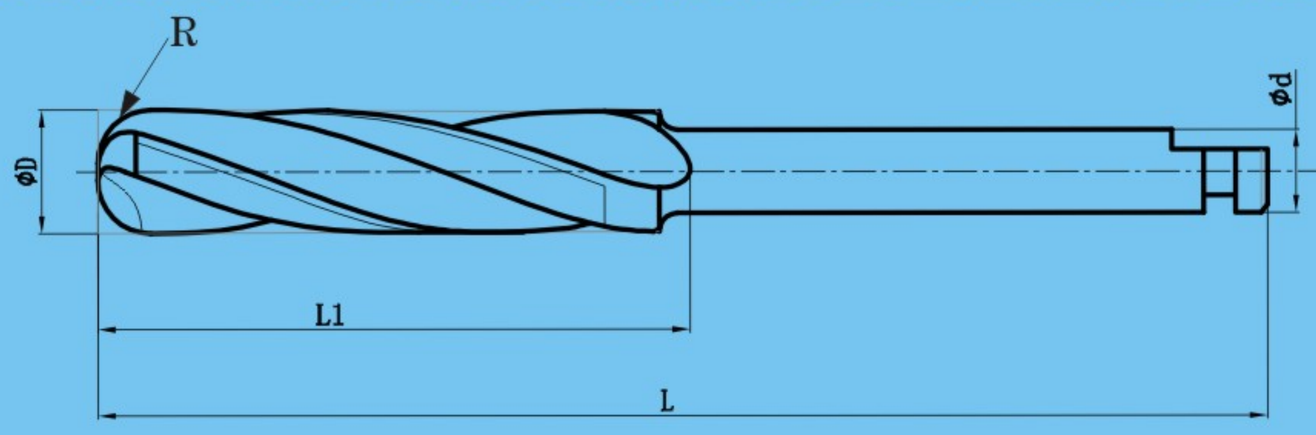

部分尺寸 some size

刃徑ΦD Diameter	3.5	3.5	4.2	4.2
刃長L1 Length of cut	17	21	17	21
柄徑Φd Shank Dia.	2.35	2.35	2.35	2.35
總長L Overall length	33	41	33	41
刃數Z No. of flute	3	3	3	3



※必要可带穿透&不穿透，不同等级加工的中空、空芯内孔加工。
With or without penetration, hollow & hollow core inner hole process with different grades.
必要に応じて、貫通付き&貫通なし、各レベル加工での中空、中空内穴加工。

★可超硬、超精研磨.任意的柄部類型.芯厚.容屑槽寬度.刃背方式.鑽尖方式.内冷却孔方式.刃部結構.刃口角度.刃口鋒利程度之要求.及高可至±0.003mm（3μm）的尺寸公差要求 We can produce with super hard and super finish grinding and satisfy your requirement of any type of shank, web thickness, width of chip flute, land, drill tip,inner cooling hole, structure of cutting edge, angle of cutting edge, degree of sharpness of cutting edge, and the dimension tolerance can be up to ±0.003mm（3μm）

LZQ

醫用工具及配件系列（引導鑽頭）
Medical tools and parts series(Guide drill bits)
医療器具及び部品シリーズ(ガイドドリルヘッド)

（超高防銹高耐磨（AA）&高精密特殊非標成型）
(unltra-high anti-rust(AA)&high precision special nonstandard forming)
超防錆高耐磨耗(AA)&高精密特殊非標準成型

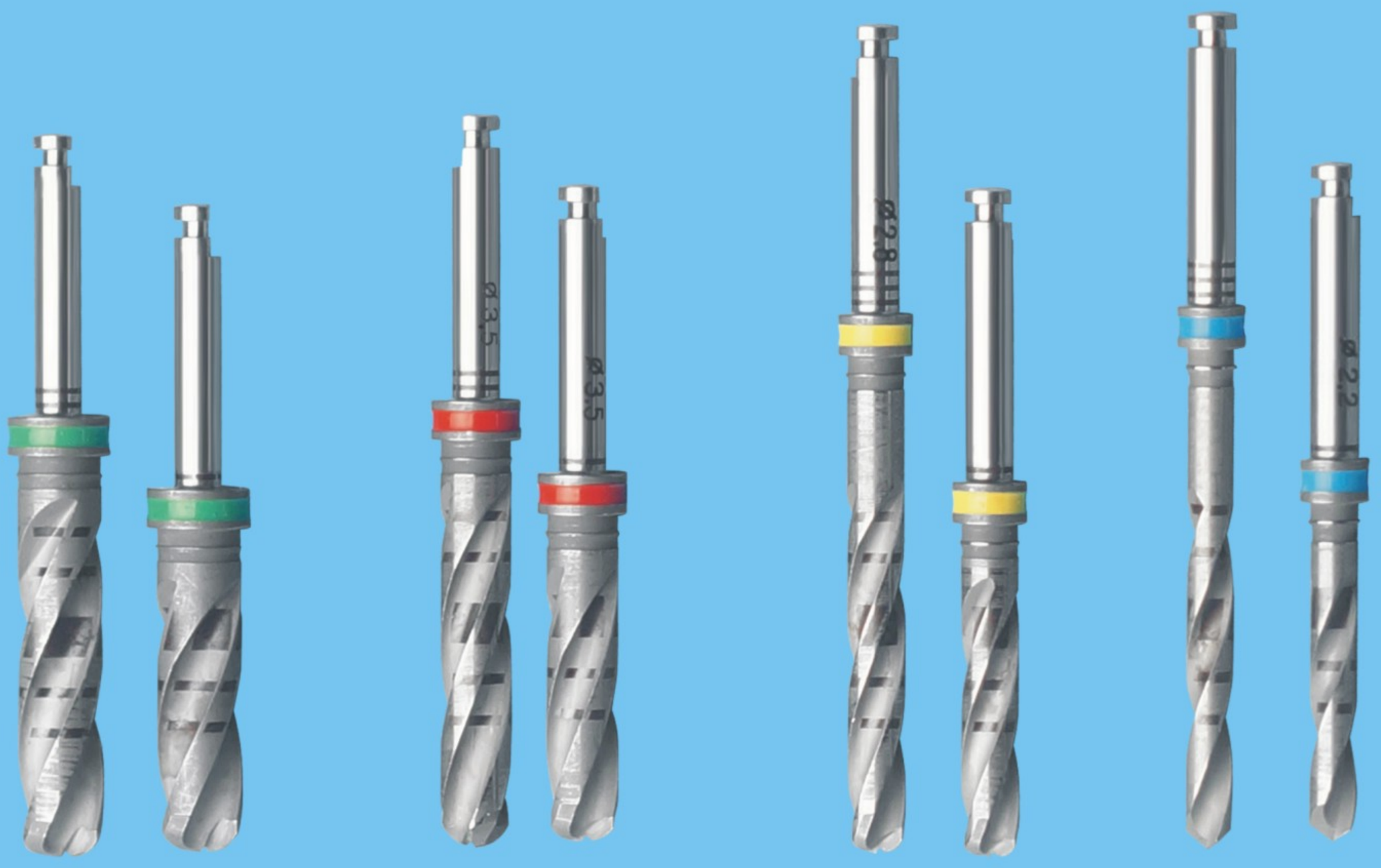

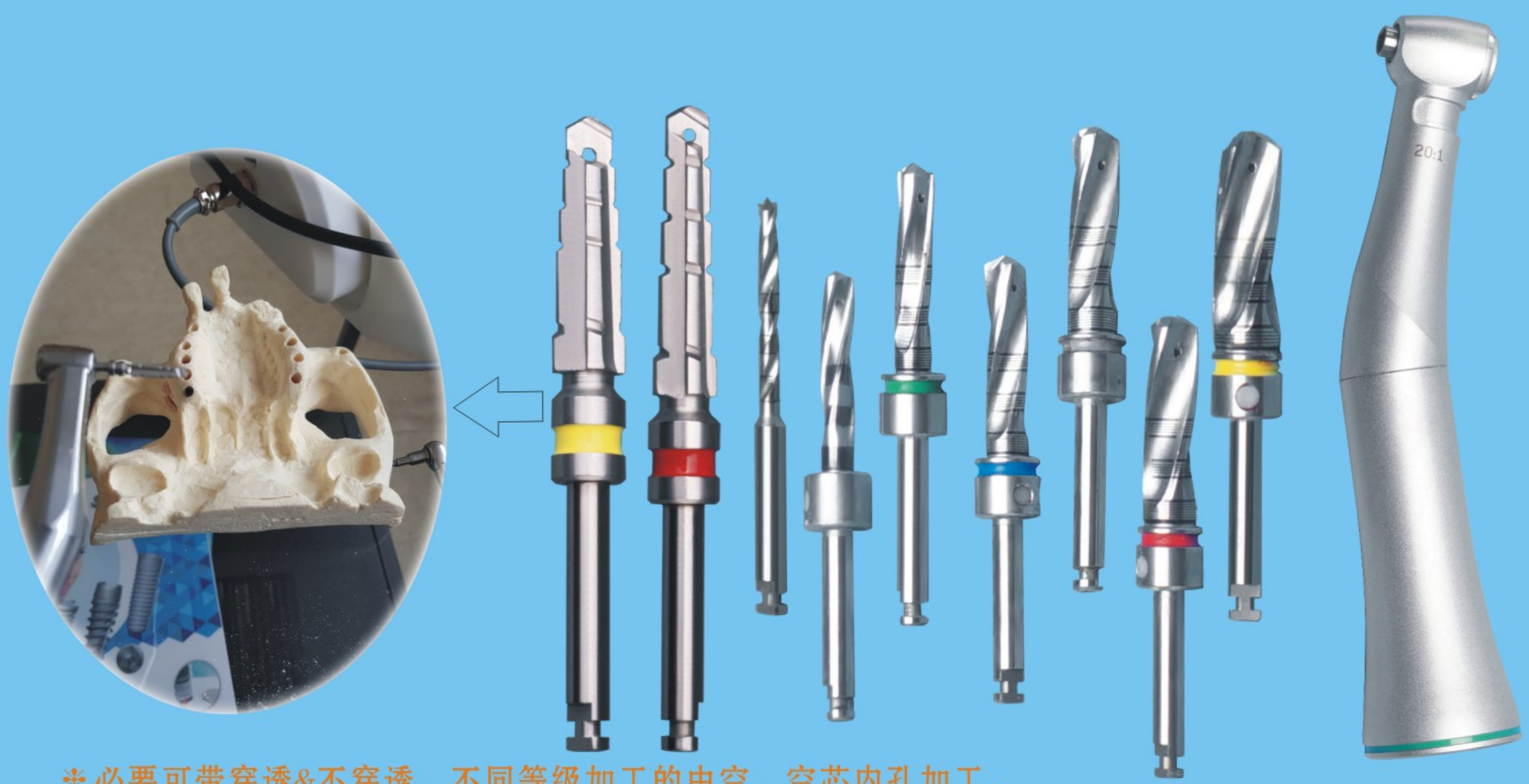

※必要可带穿透&不穿透，不同等级加工的中空、空芯内孔加工。
With or without penetration, hollow & hollow core inner hole process with different grades.
必要に応じて、貫通付き&貫通なし、各レベル加工での中空、中空内穴加工。

★可超硬、超精研磨.任意的柄部類型.芯厚.容屑槽寬度.刃背方式.鑽尖方式.内冷却孔方式.刃部結構.刃口角度.刃口鋒利程度之要求.及高可至±0.003mm（3μm）的尺寸公差要求 We can produce with super hard and super finish grinding and satisfy your requirement of any type of shank, web thickness, width of chip flute, land, drill tip,inner cooling hole, structure of cutting edge, angle of cutting edge, degree of sharpness of cutting edge, and the dimension tolerance can be up to ±0.003mm（3μm）

LZQ

醫用工具及配件系列(支抗鑽頭)
Medical tools and parts series(Anchorage Drills)
医療器具及び部品シリーズ(アンカレッジドリルヘッド)

（超高防銹高耐磨（AA）&高精密特殊非標成型）
(unltra-high anti-rust(AA)&high precision special nonstandard forming)
超防錆高耐磨耗(AA)&高精密特殊非標準成型





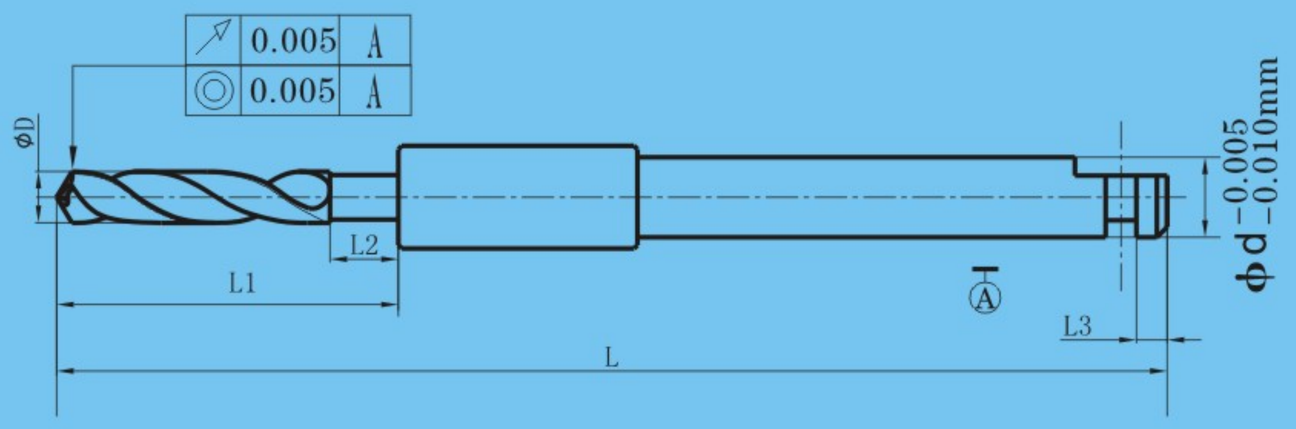

可以至φ0.30mm的微細型鑽針型。
Micro drill point to φ0.30mm

部分尺寸some sizes



刃徑φD Diameter	1.2	1.2	1.2	1.2	1.2	1.5	1.5	1.5	1.5	1.5
刃長L1 Length of cut 刃の長さ	8.0	10	12	14	16	8.0	10	12	14	16
柄徑φd Shank Dia.	2.35	2.35	2.35	2.35	2.35	2.35	2.35	2.35	2.35	2.35
總長L Overall length 総長さ	32.5	32.5	32.5	32.5	32.5	32.5	32.5	32.5	32.5	32.5
刃數Z No.of flute	2.0	2.0	2.0	2.0	2.0	2.0	2.0	2.0	2.0	2.0

其它規格刃徑、刃長，總長等，可以按要求生産，比如刃徑、1.0;1.1;1.6;1.8;2.0等……
Other specifications such as flute diameter, flute length, total length, etc, can be produced as per requirement, for example, the flute diameter could be 1.0, 1.1, 1.6, 1.8, 2.0, ...





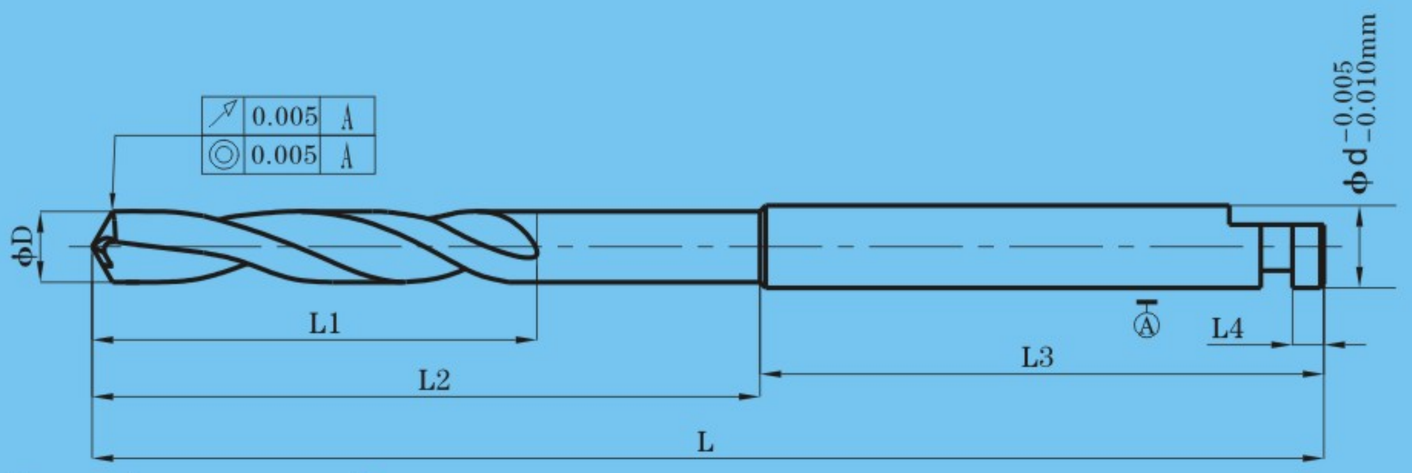

部分尺寸some sizes



刃徑φD Diameter	1.2	1.4	1.6	2.0	2.2
刃長L1 Length of cut 刃の長さ	8	8	8	10	10
柄徑φd Shank Dia.	2.35	2.35	2.35	2.35	2.35
總長L Overall length 総長さ	36	36	36	36	36
刃數Z No.of flute	2	2	2	2	2

※必要可带穿透&不穿透，不同等级加工的中空、空芯内孔加工。
With or without penetration, hollow & hollow core inner hole process with different grades.
必要に応じて、貫通付き&貫通なし、各レベル加工での中空、中空内穴加工。

★可超硬、超精研磨. 任意的柄部類型. 芯厚. 容屑槽寬度. 刃背方式. 鑽尖方式. 内冷却孔方式. 刃部結構. 刃口角度. 刃口鋒利程度之要求. 及高可至±0.003mm（3μm）的尺寸公差要求 We can produce with super hard and super finish grinding and satisfy your requirement of any type of shank, web thickness, width of chip flute, land, drill tip,inner cooling hole, structure of cutting edge, angle of cutting edge, degree of sharpness of cutting edge, and the dimension tolerance can be up to ±0.003mm（3μm）

LZQ

醫用工具及配件系列(鑽頭)
Medical tools and parts series(Drill)
医療器具及び部品シリーズ(ドリルヘッド)

（超高防銹高耐磨（AA）&高精密特殊非標成型）
(unltra-high anti-rust(AA)&high precision special nonstandard forming)
超防錆高耐磨耗(AA)&高精密特殊非標準成型



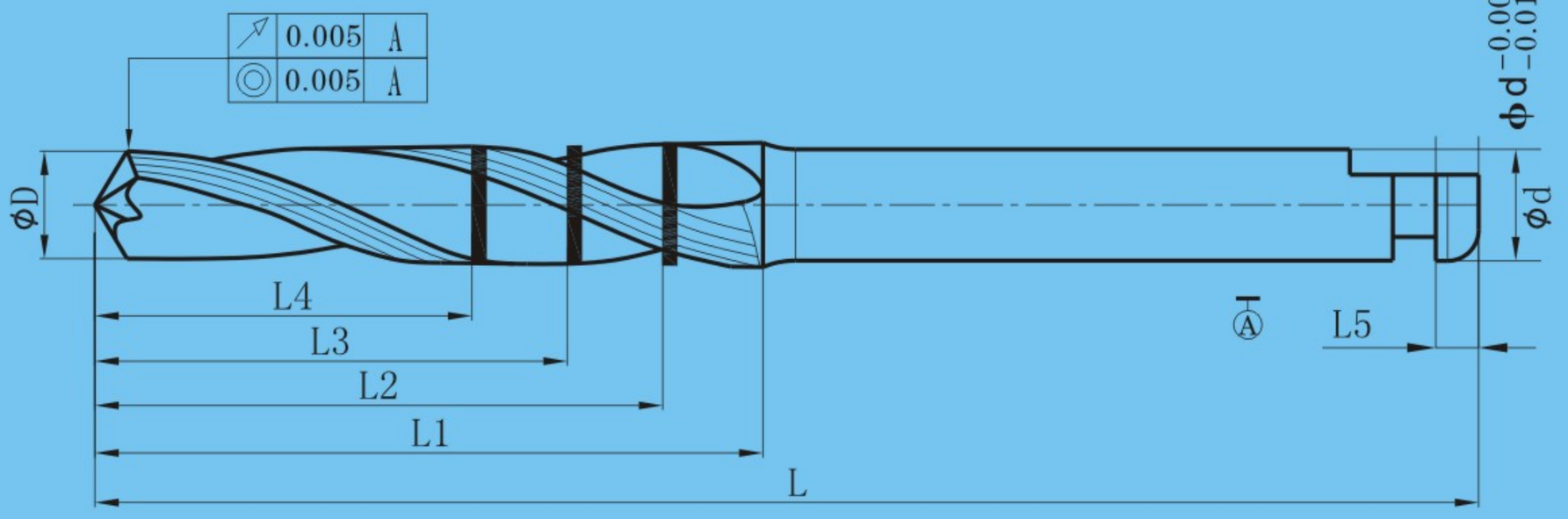

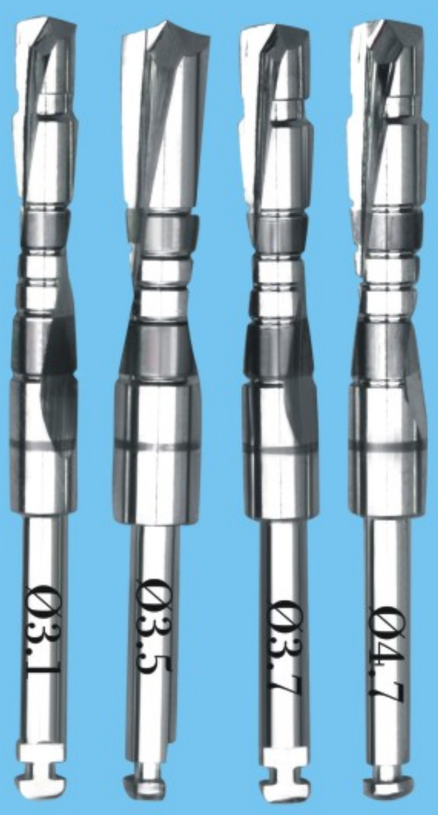

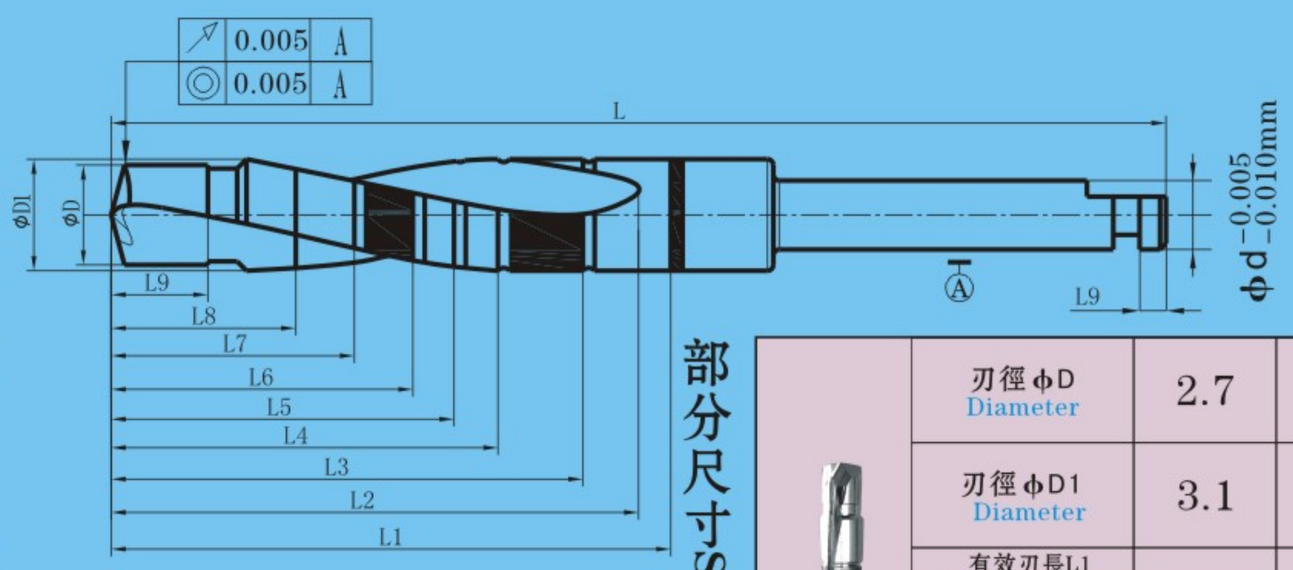

部分尺寸some sizes



刃徑φD Diameter	2.7	3.1	3.3	4.3
刃徑φD1 Diameter	3.1	3.5	3.7	4.7
有效刃長L1 Effective length of cutting edge 刃の長さ	19.1	19.1	19.1	19.1
柄徑φd Shank Dia.	2.35	2.35	2.35	2.35
總長L Overall length 総長さ	36	36	36	36
刃數Z No.of flute	2	2	2	2



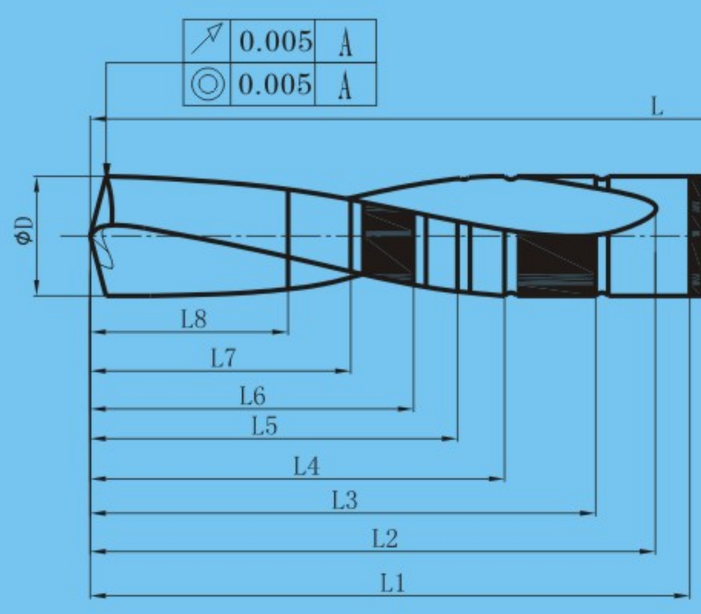

部分尺寸some sizes



刃徑φD Diameter	2.5	2.7	4.0
有效刃長L1 Effective length of cutting edge 刃の長さ	19.1	19.1	19.1
柄徑φd Shank Dia.	2.35	2.35	2.35
總長L Overall length 総長さ	36	36	36
刃數Z No.of flute	2	2	2

※必要可带穿透&不穿透，不同等级加工的中空、空芯内孔加工。
With or without penetration, hollow & hollow core inner hole process with different grades.
必要に応じて、貫通付き&貫通なし、各レベル加工での中空、中空内穴加工。

★可超硬、超精研磨. 任意的柄部類型. 芯厚. 容屑槽寬度. 刃背方式. 鑽尖方式. 内冷却孔方式. 刃部結構. 刃口角度. 刃口鋒利程度之要求. 及高可至±0.003mm（3μm）的尺寸公差要求 We can produce with super hard and super finish grinding and satisfy your requirement of any type of shank, web thickness, width of chip flute, land, drill tip,inner cooling hole, structure of cutting edge, angle of cutting edge, degree of sharpness of cutting edge, and the dimension tolerance can be up to ±0.003mm（3μm）

（超高防銹高耐磨（AA）&高精密特殊非標成型）
(unltra-high anti-rust(AA)&high precision special nonstandard forming)
超防錆高耐磨耗(AA)&高精密特殊非標準成型



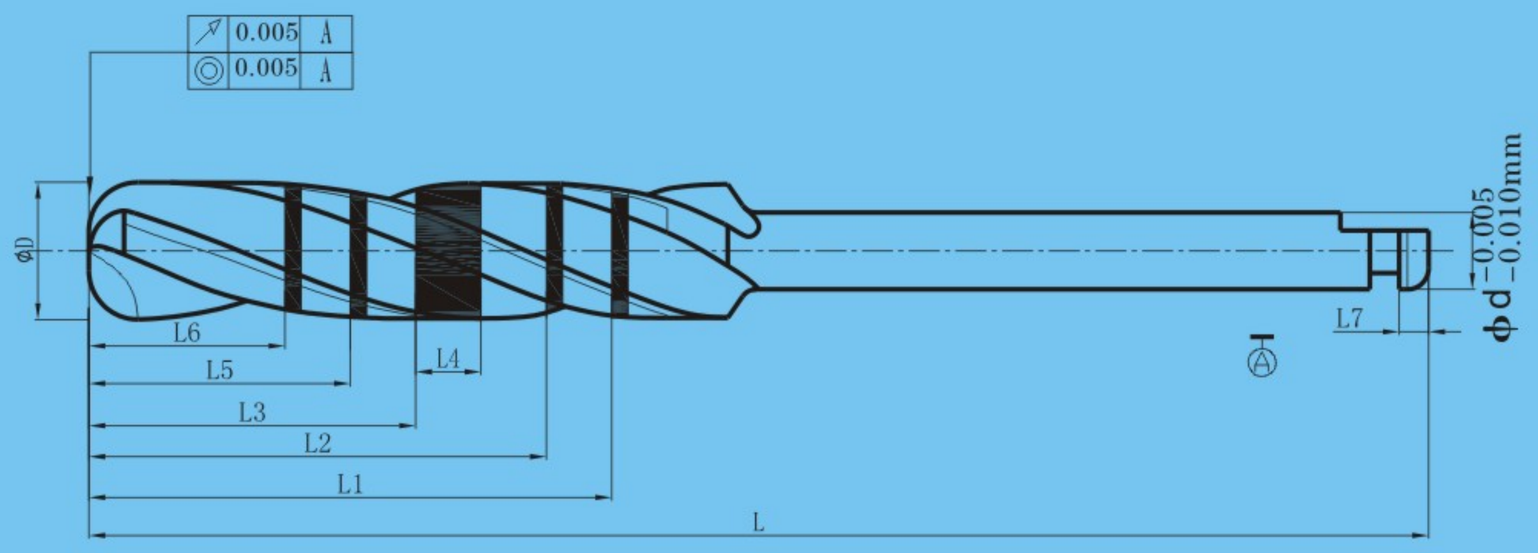

部分尺寸 some sizes

	刃徑 φD Diameter	3.5	3.5	4.2	4.2
	有效刃長L1 Effective length of cutting edge 刃の長さ	12	16	12	16
	柄徑 φd Shank Dia.	2.35	2.35	2.35	2.35
	總長L Overall length 総長さ	33	41	33	41
	刃數Z No.of flute	3	3	3	3



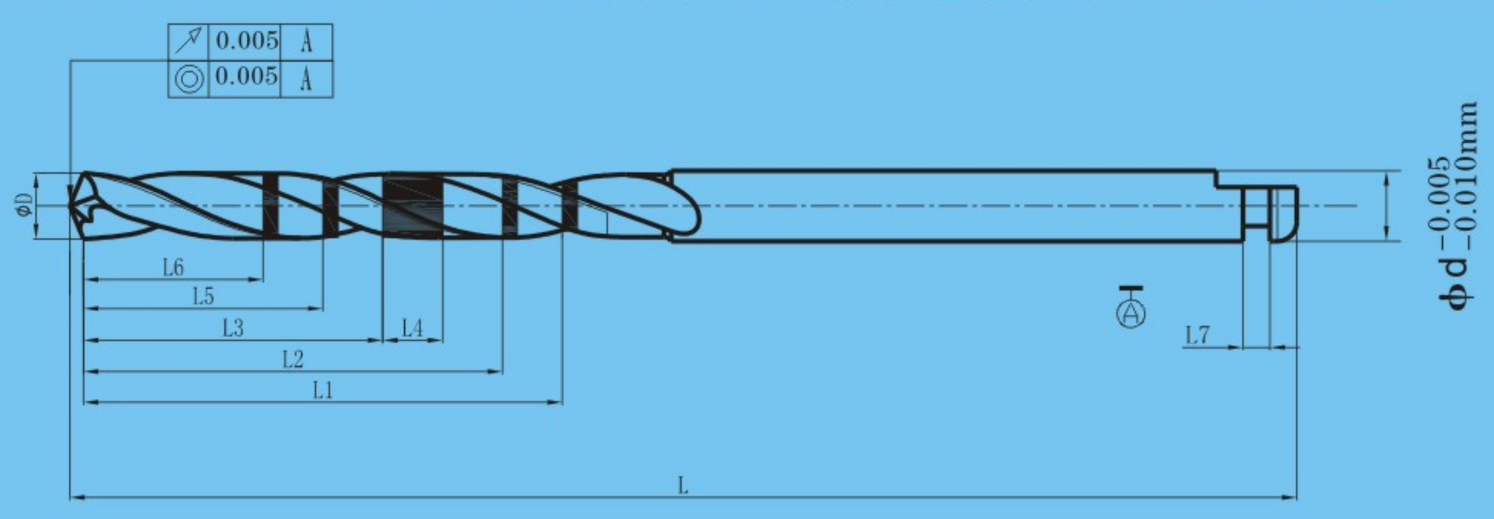

部分尺寸 some sizes

	刃徑 φD Diameter	2.2	2.2	2.8	2.8
	有效刃長L1 Effective length of cutting edge 刃の長さ	12	16	12	16
	柄徑 φd Shank Dia.	2.35	2.35	2.35	2.35
	總長L Overall length 総長さ	33	41	33	41
	刃數Z No.of flute	2	2	3	3

※必要可带穿透&不穿透，不同等级加工的中空、空芯内孔加工。
With or without penetration, hollow & hollow core inner hole process with different grades.
必要に応じて、貫通付き&貫通なし、各レベル加工での中空、中空内穴加工。

★可超硬、超精研磨. 任意的柄部類型. 芯厚. 容屑槽寬度. 刃背方式. 鑽尖方式. 內冷却孔方式. 刃部結構. 刃口角度. 刃口鋒利程度之要求. 及高可至 ±0.003mm（3μm）的尺寸公差要求 We can produce with super hard and super finish grinding and satisfy your requirement of any type of shank, web thickness, width of chip flute, land, drill tip,inner cooling hole, structure of cutting edge, angle of cutting edge, degree of sharpness of cutting edge, and the dimension tolerance can be up to ±0.003mm（3μm）

醫用工具及配件系列(鑽頭)
Medical tools and parts series(Drill)
医療器具及び部品シリーズ(ドリルヘッド)

（超高防銹高耐磨（AA）&高精密特殊非標成型）
(unltra-high anti-rust(AA)&high precision special nonstandard forming)
超防錆高耐磨耗(AA)&高精密特殊非標準成型



some sizes
部分尺寸

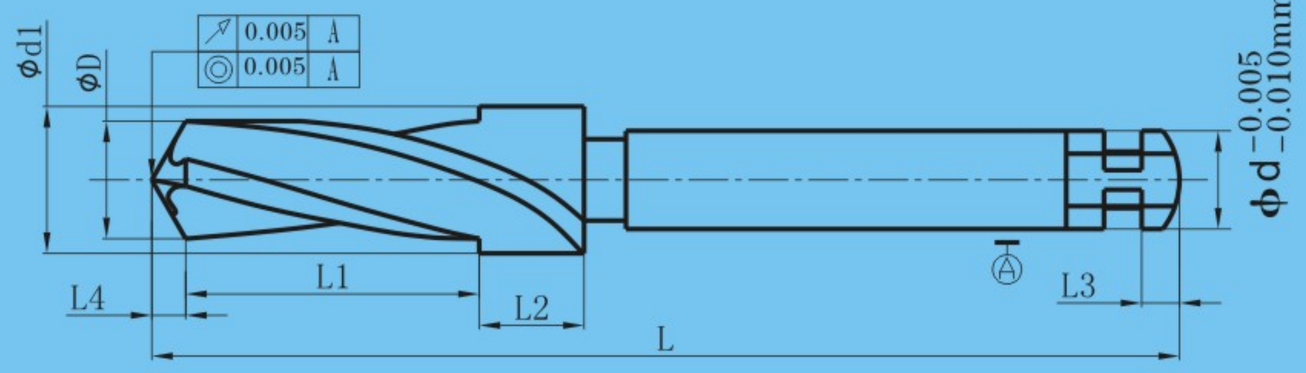

	刃徑 φD Diameter	2.8	2.8	2.8	2.8	2.8	2.8
	刃長L1 Length of cut 刃の長さ	7.0	8.5	10	11.5	13	15
	柄徑 φd Shank Dia.	2.35	2.35	2.35	2.35	2.35	2.35
	總長L Overall length 総長さ	24.5	26	27.5	29	30.5	32.5
	刃數Z No.of flute	3	3	3	3	3	3



some sizes
部分尺寸

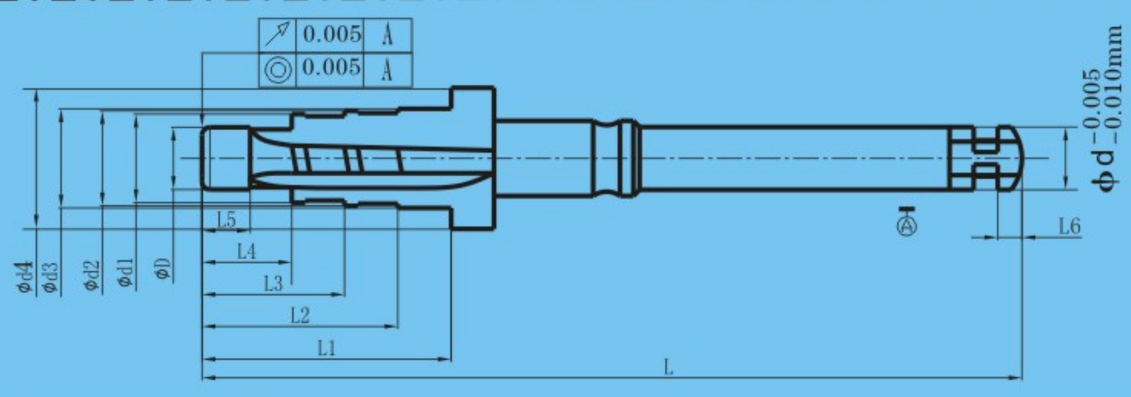

	刃徑 φd3 Diameter	3.5	4.0	4.5	5.0
	刃長L1 Length of cut 刃の長さ	8.8	8.8	8.8	8.8
	柄徑 φd Shank Dia.	2.35	2.35	2.35	2.35
	總長L Overall length 総長さ	30.6	30.2	30.1	30.1
	刃數Z No.of flute	1	1	1	1



some sizes
部分尺寸

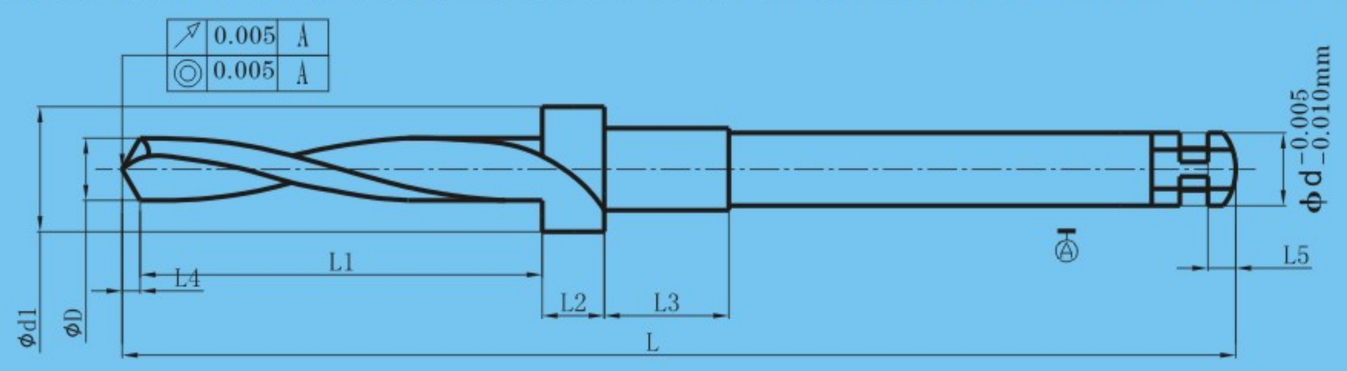

	刃徑 φD Diameter	2.0	2.0	2.0	2.0
	刃長L1 Length of cut 刃の長さ	8.5	10	11.5	13
	柄徑 φd Shank Dia.	2.35	2.35	2.35	2.35
	總長L Overall length 総長さ	31.8	34.8	30.3	34.2
	刃數Z No.of flute	3	3	3	3

※必要可带穿透&不穿透，不同等级加工的中空、空芯内孔加工。
With or without penetration, hollow & hollow core inner hole process with different grades.
必要に応じて、貫通付き&貫通なし、各レベル加工での中空、中空内穴加工。

★可超硬、超精研磨. 任意的柄部類型. 芯厚. 容屑槽寬度. 刃背方式. 鑽尖方式. 内冷却孔方式. 刃部結構. 刃口角度. 刃口鋒利程度之要求. 及高可至 ±0.003mm（3μm）的尺寸公差要求 We can produce with super hard and super finish grinding and satisfy your requirement of any type of shank, web thickness, width of chip flute, land, drill tip,inner cooling hole, structure of cutting edge, angle of cutting edge, degree of sharpness of cutting edge, and the dimension tolerance can be up to ±0.003mm（3μm）

（超高防銹高耐磨（AA）&高精密特殊非標成型）
(unltra-high anti-rust(AA)&high precision special nonstandard forming)
超防錆高耐磨耗(AA)&高精密特殊非標準成型

平底、带倒角
Flat end with chamfering



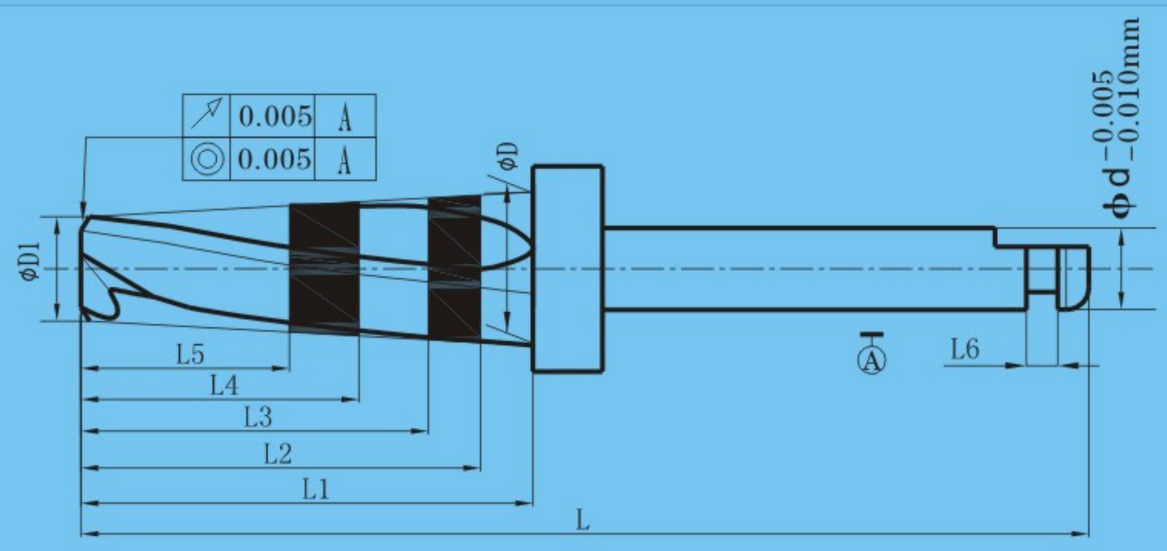

部分尺寸some sizes



小徑 φD1 Diameter	2.3	2.65	2.65	3.0	3.83
大徑 φD Diameter	2.85	3.3	3.85	4.4	5.4
刃長L1 Length of cut 刃の長さ	13	13	13	13	13
柄徑 φd Shank Dia.	2.35	2.35	2.35	2.35	2.35
總長L Overall length 總長さ	30	30	30	30	30
刃數Z No.of flute	3	3	3	3	3

鑽頭打標是根據種值體規格打標。
Drills are marked according to the implant specification.



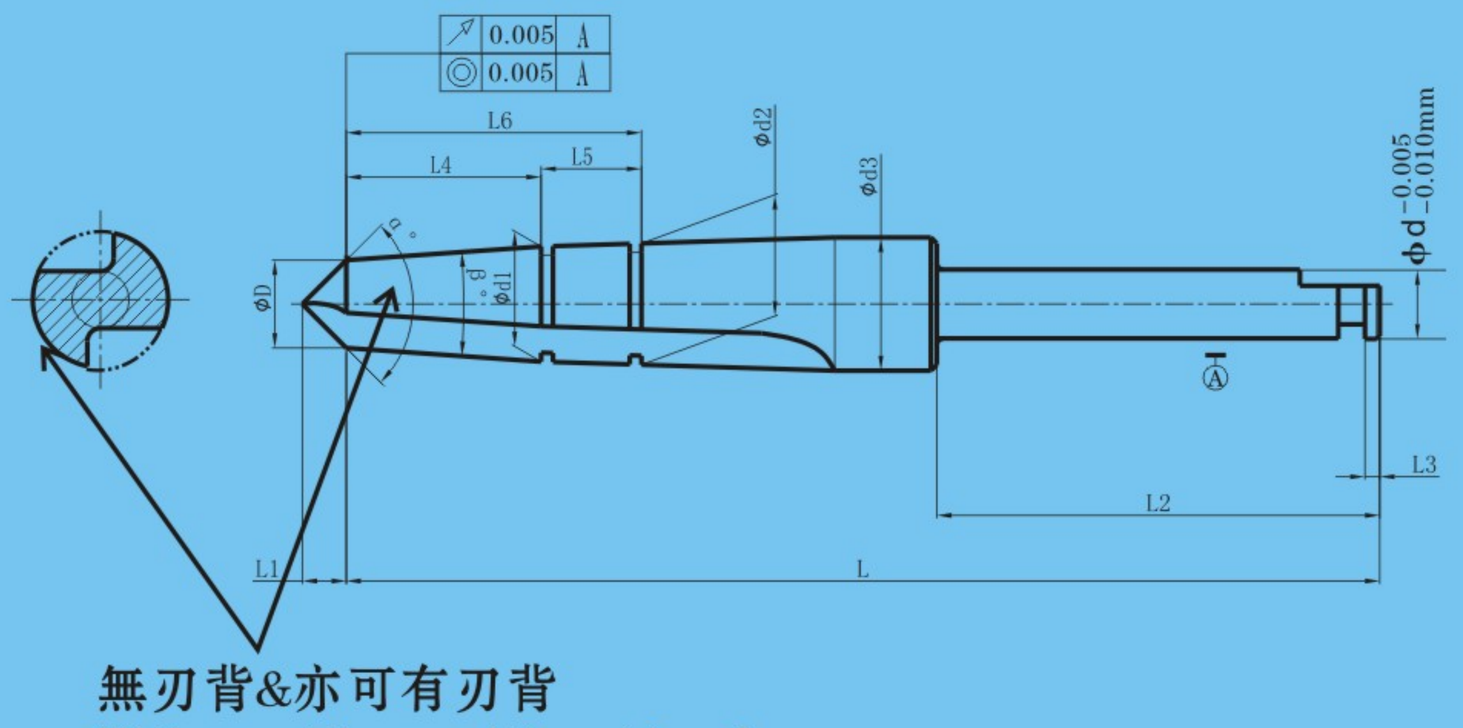

無刃背&亦可有刃背
Either with or without land

※必要可带穿透&不穿透，不同等级加工的中空、空芯内孔加工。
With or without penetration, hollow & hollow core inner hole process with different grades.
必要に応じて、貫通付き&貫通なし、各レベル加工での中空、中空内穴加工。

★可超硬、超精研磨，任意的柄部類型，芯厚，容屑槽寬度，刃背方式，鑽尖方式，内冷却孔方式，刃部結構，刃口角度，刃口鋒利程度之要求，及高可至±0.003mm（3μm）的尺寸公差要求 We can produce with super hard and super finish grinding and satisfy your requirement of any type of shank, web thickness, width of chip flute, land, drill tip,inner cooling hole, structure of cutting edge, angle of cutting edge, degree of sharpness of cutting edge, and the dimension tolerance can be up to ±0.003mm（3μm）

锥度型高可至±0.01° 的公差。
The tolerance of the taper can be up to ±0.01°



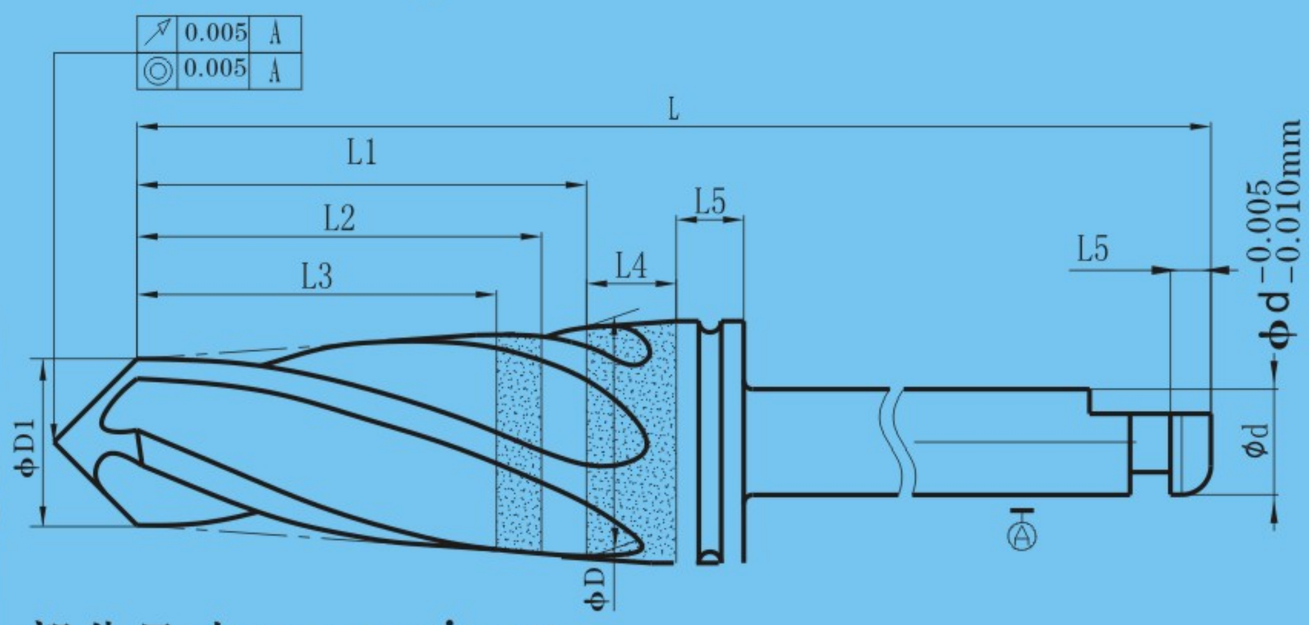

部分尺寸some sizes



小徑 ΦD1 Diameter	2.6	3.0	3.2	3.4	3.7	3.9	4.2
大徑 ΦD Diameter	2.6	3.3	3.5	3.7	4.0	4.2	4.5
刃長L3 Length of cut 刃の長さ	8.0	8.0	8.0	8.0	8.0	8.0	8.0
柄徑 Φd Shank Dia.	2.35	2.35	2.35	2.35	2.35	2.35	2.35
總長L Overall length 總長さ	27.5	27.5	27.5	27.5	27.5	27.5	27.5
刃數Z No.of flute	3	3	3	3	3	3	3



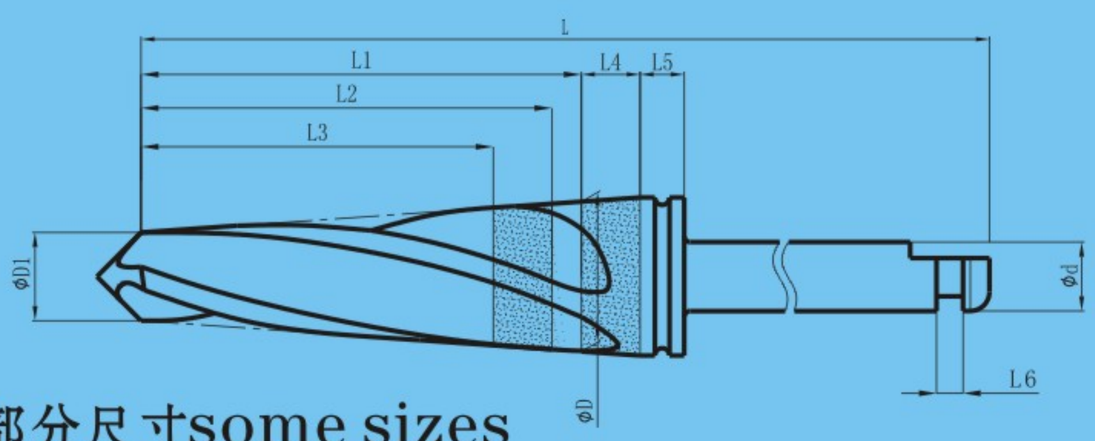

部分尺寸some sizes

小徑 ΦD1 Diameter	2.6	3.0	3.2	3.4	3.7	3.9	4.2
大徑 ΦD Diameter	2.6	3.3	3.5	3.7	4.0	4.2	4.5
刃長L3 Length of cut 刃の長さ	12.0	12.0	12.0	12.0	12.0	12.0	12.0
柄徑 Φd Shank Dia.	2.35	2.35	2.35	2.35	2.35	2.35	2.35
總長L Overall length 總長さ	32.5	32.5	32.5	32.5	32.5	32.5	32.5
刃數Z No.of flute	3	3	3	3	3	3	3

※必要可带穿透&不穿透，不同等级加工的中空、空芯内孔加工。
With or without penetration, hollow & hollow core inner hole process with different grades.
必要に応じて、貫通付き&貫通なし、各レベル加工での中空、中空内穴加工。

★可超硬、超精研磨. 任意的柄部類型. 芯厚. 容屑槽寬度. 刃背方式. 鑽尖方式. 內冷却孔方式. 刃部結構. 刃口角度. 刃口鋒利程度之要求. 及高可至±0.003mm（3μm）的尺寸公差要求 We can produce with super hard and super finish grinding and satisfy your requirement of any type of shank, web thickness, width of chip flute, land, drill tip,inner cooling hole, structure of cutting edge, angle of cutting edge, degree of sharpness of cutting edge, and the dimension tolerance can be up to ±0.003mm（3μm）

醫用工具及配件系列(鑽頭)
Medical tools and parts series(Drill)
医療器具及び部品シリーズ(ドリルヘッド)

（超高防銹高耐磨（AA）&高精密特殊非標成型）
(unltra-high anti-rust(AA)&high precision special nonstandard forming)
超防錆高耐磨耗(AA)&高精密特殊非標準成型



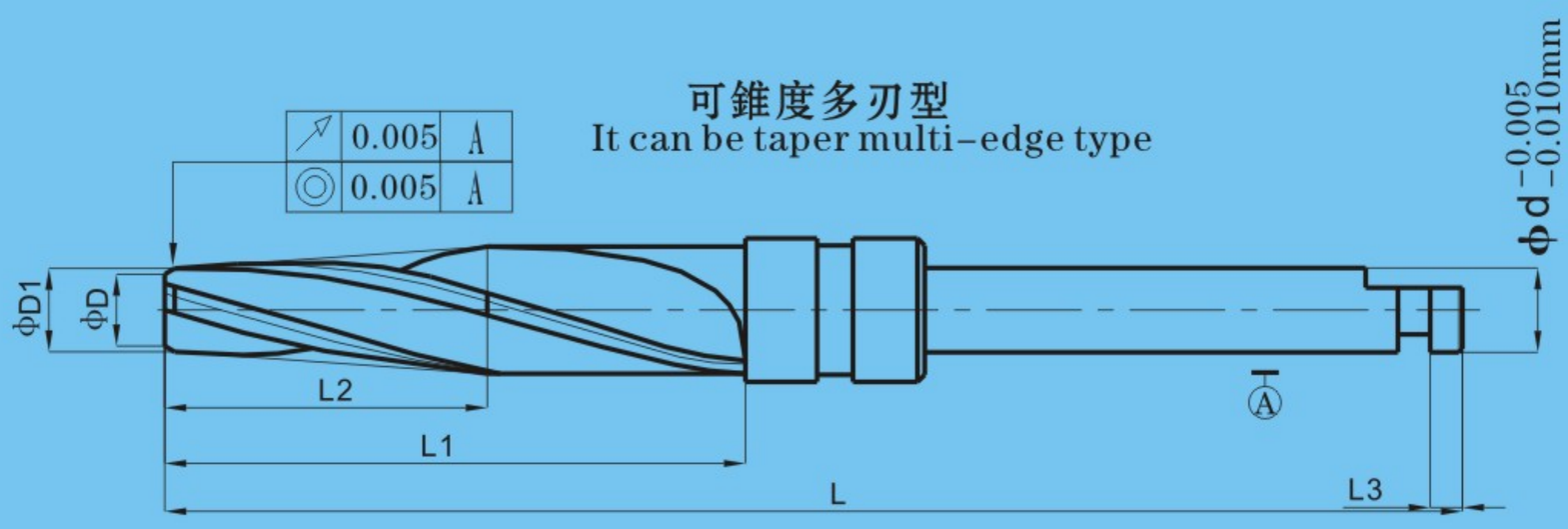

★、各種鑽頭鑽套可以采用任意材料及幾何形狀、成型超精、超硬研磨
All drills and stoppers can be made with any material or into any geometrical shape by profile superfinishing and superhard grinding

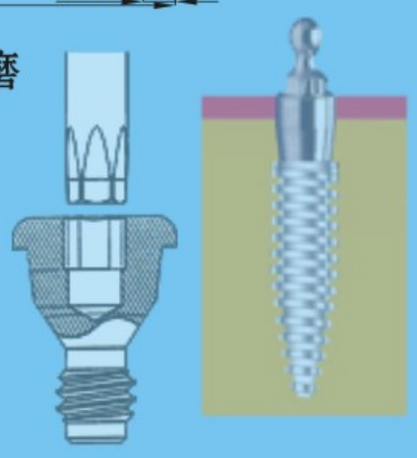

可研磨微細的特殊形狀的刃尖頂角及成型刃. We can grind super thin and special shaped apex angle of the tip of cutting edge and profile cutting edge.

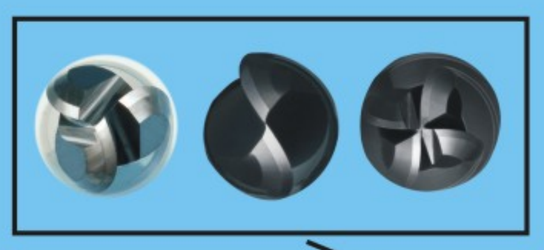



可依樣依要求研磨出不同要求的刃口鋒利程度及容屑槽。
Different edge sharpness and chip flutes can be ground according to the samples and the requirements.

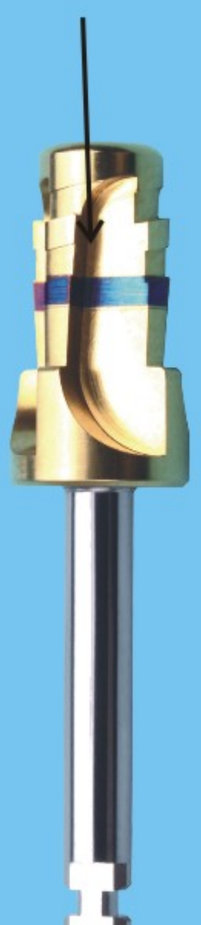

※必要可带穿透&不穿透，不同等级加工的中空、空芯内孔加工。
With or without penetration, hollow & hollow core inner hole process with different grades.
必要に応じて、貫通付き&貫通なし、各レベル加工での中空、中空内穴加工。

★可超硬、超精研磨. 任意的柄部類型. 芯厚. 容屑槽寬度. 刃背方式. 鑽尖方式. 内冷却孔方式. 刃部結構. 刃口角度. 刃口鋒利程度之要求. 及高可至 ±0.003mm（3μm）的尺寸公差要求 We can produce with super hard and super finish grinding and satisfy your requirement of any type of shank, web thickness, width of chip flute, land, drill tip,inner cooling hole, structure of cutting edge, angle of cutting edge, degree of sharpness of cutting edge, and the dimension tolerance can be up to ±0.003mm（3μm）

LZQ

醫用工具及配件系列(錐度鑽頭)
Medical tools and parts series(Taper Drill)
医療器具及び部品シリーズ(テーパー ● ビット)

（超高防銹高耐磨（AA）&高精密特殊非標成型）
(unltra-high anti-rust(AA)&high precision special nonstandard forming)
超防錆高耐磨耗(AA)&高精密特殊非標準成型



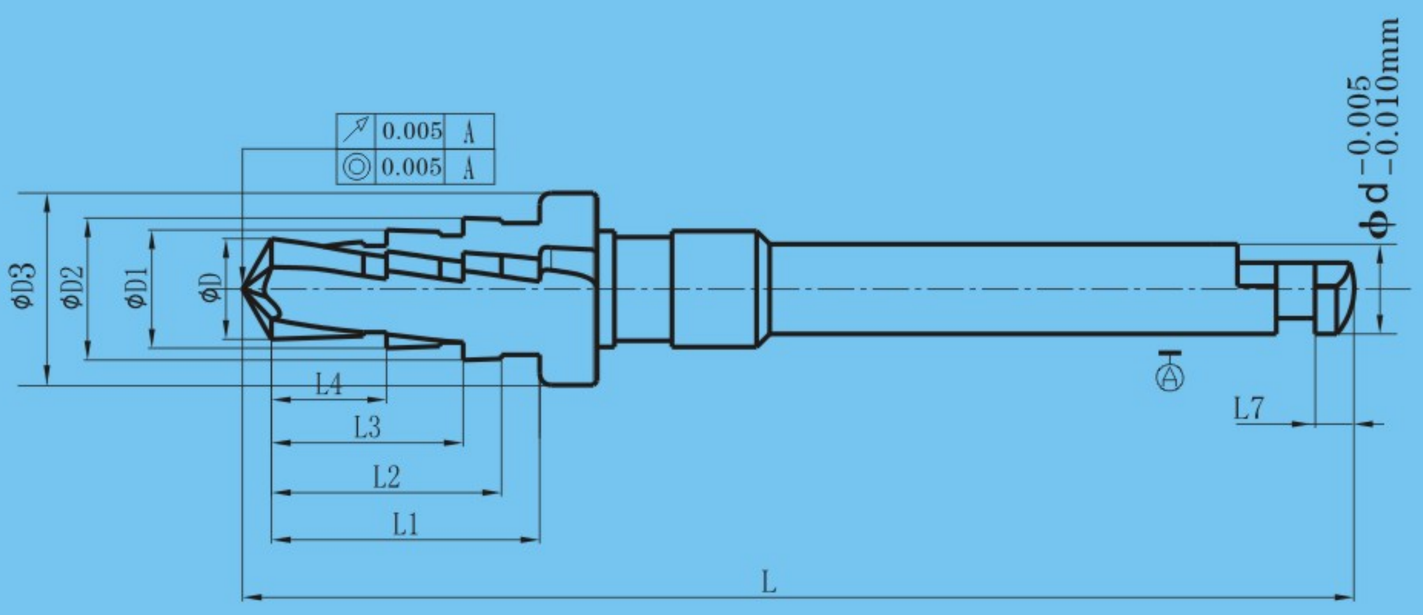

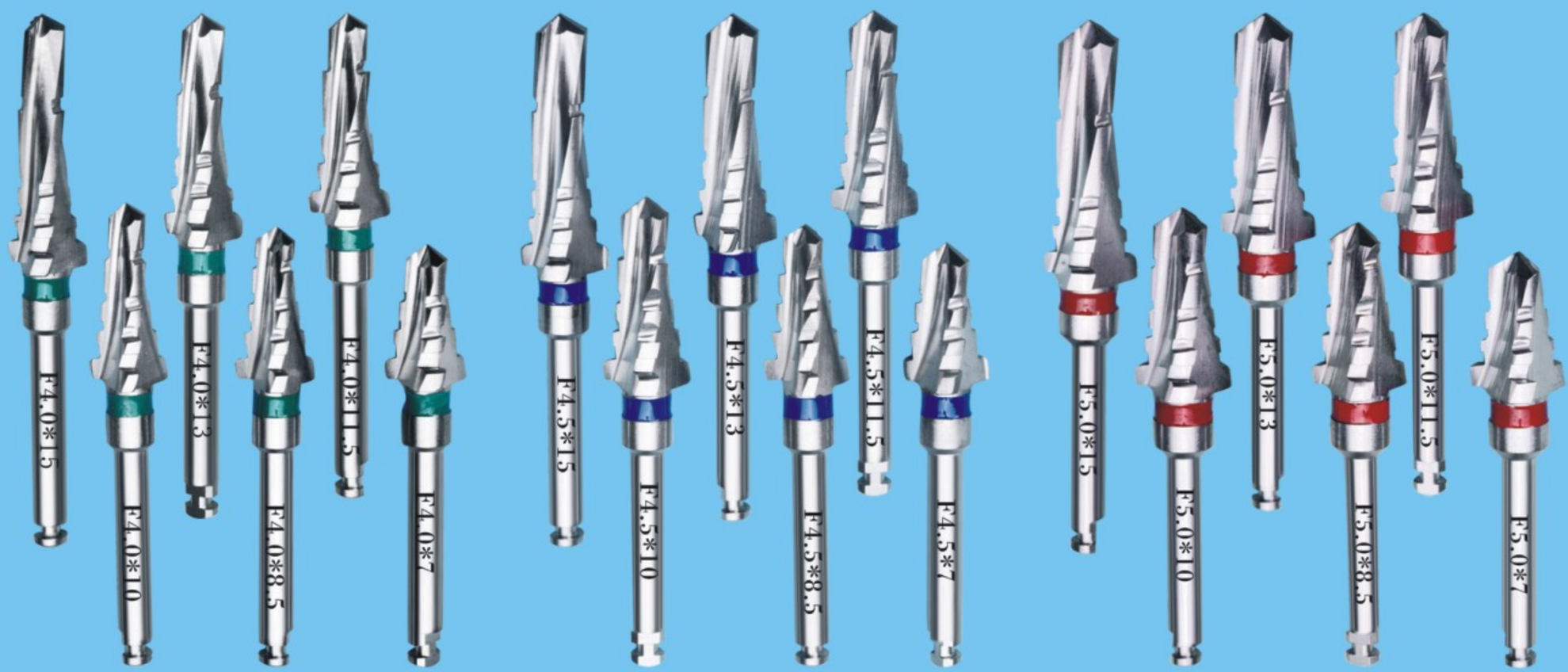

部分尺寸some sizes



刃徑 φD2 Diameter	刃長L2 Length of cut 刃の長さ	柄徑 φd Shank Dia.	總長L Overall length 総長さ	刃數Z No.of flute	刃徑 φD2 Diameter	刃長L2 Length of cut 刃の長さ	柄徑 φd Shank Dia.	總長L Overall length 総長さ	刃數Z No.of flute
3.5	7.0	2.35	29	3	4.5	7.0	2.35	29.2	3
3.5	8.5	2.35	30.5	3	4.5	8.5	2.35	30.6	3
3.5	10	2.35	32	3	4.5	10	2.35	32.2	3
3.5	11.5	2.35	33.5	3	4.5	11.5	2.35	33.7	3
3.5	13	2.35	35	3	4.5	13	2.35	35.3	3
3.5	15	2.35	37.1	3	4.5	15	2.35	37.2	3
4.0	7.0	2.35	29.2	3	5.0	7.0	2.35	29.3	3
4.0	8.5	2.35	30.6	3	5.0	8.5	2.35	30.8	3
4.0	10	2.35	32.1	3	5.0	10	2.35	32.3	3
4.0	11.5	2.35	33.6	3	5.0	11.5	2.35	33.9	3
4.0	13	2.35	35.1	3	5.0	13	2.35	35.2	3
4.0	15	2.35	37.2	3	5.0	15	2.35	37.3	3

※必要可带穿透&不穿透，不同等级加工的中空、空芯内孔加工。
With or without penetration, hollow & hollow core inner hole process with different grades.
必要に応じて、貫通付き&貫通なし、各レベル加工での中空、中空内穴加工。

★可超硬、超精研磨.任意的柄部類型.芯厚.容屑槽寬度.刃背方式.鑽尖方式.内冷却孔方式.刃部結構.刃口角度.刃口鋒利程度之要求.及高可至±0.003mm（3μm）的尺寸公差要求 We can produce with super hard and super finish grinding and satisfy your requirement of any type of shank, web thickness, width of chip flute, land, drill tip,inner cooling hole, structure of cutting edge, angle of cutting edge, degree of sharpness of cutting edge, and the dimension tolerance can be up to ±0.003mm（3μm）

冷却孔
Cooling hole



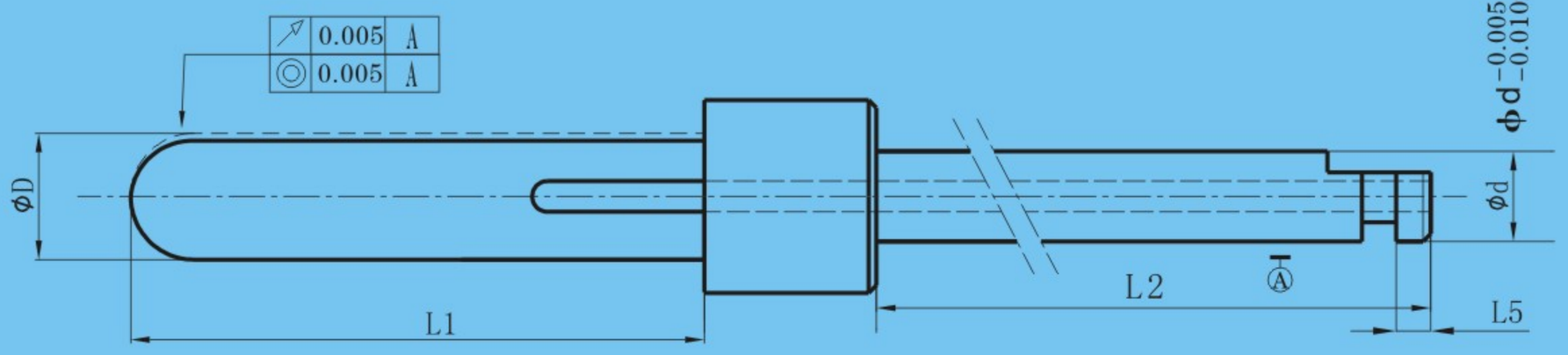

部分尺寸some sizes



刃徑ΦD Diameter	3.3	3.3	3.3	3.3	4.0	4.0	4.0	4.0
刃長L1 Length of cut 刃の長さ	8	11	13	15	8	11	13	15
柄徑Φd Shank Dia.	2.35	2.35	2.35	2.35	2.35	2.35	2.35	2.35
總長L Overall length 総長さ	27	30	32	34	27	30	32	34

★、各種鑽頭鑽套可以采用任意材料及幾何形狀、成型超精、超硬研磨
All drills and stoppers can be made with any material or into any geometrical shape by profile superfinishing and superhard grinding

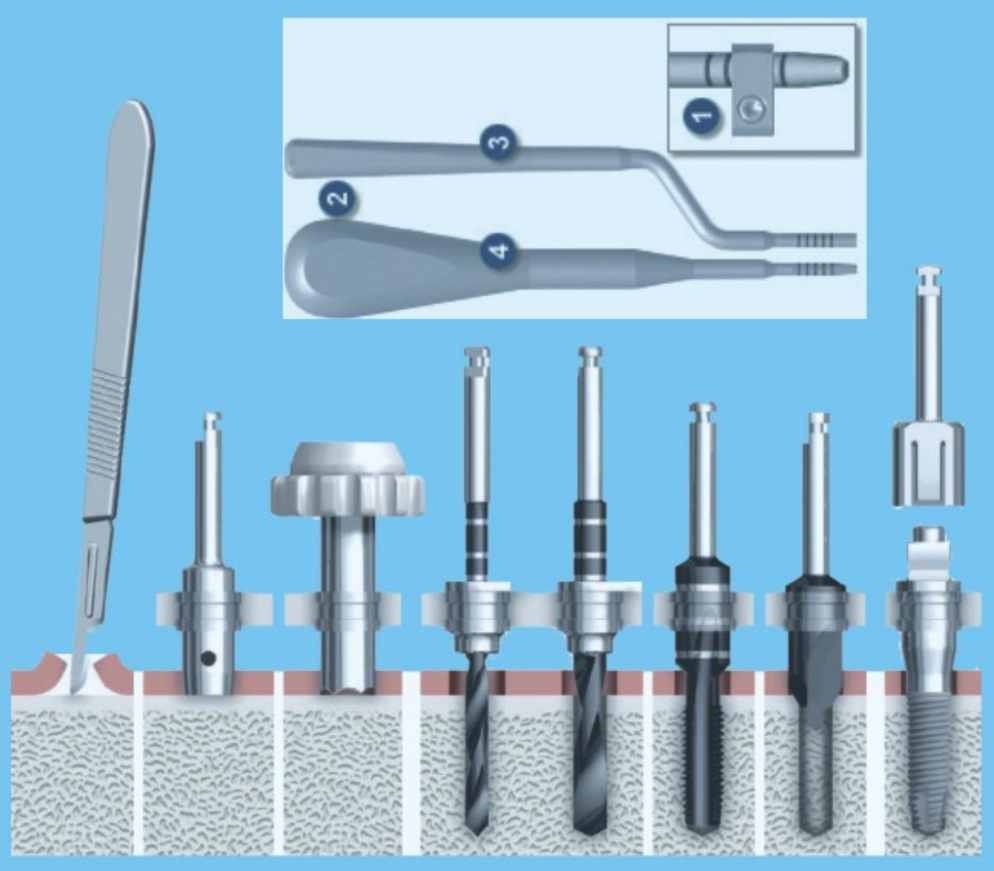

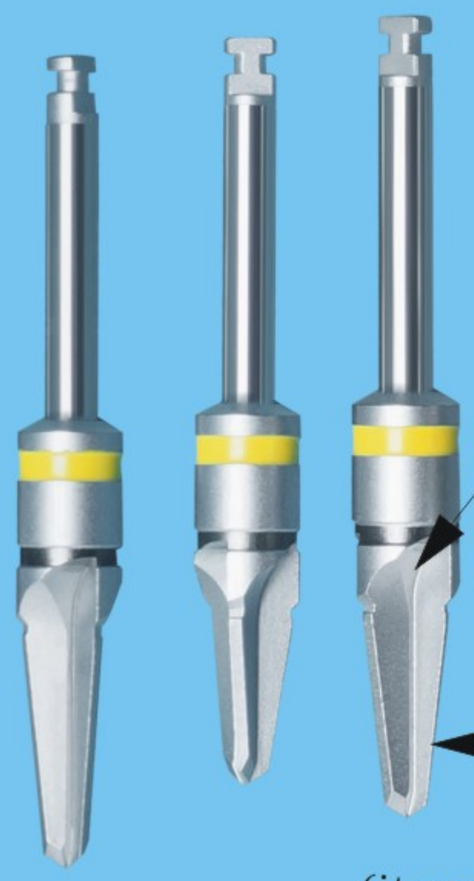

深槽至頂、可堆屑至槽頂。（可黑色、黃色、全亞光、全亮光、部分亞光+部分亮光等表面處理）
Deep groove to top, chip accumulation to the crest. (It can be with black, yellow, full matt, full shiny, partial matt + partial shiny and other surface treatment)

2刃/3刃/4刃
（可直刃/螺旋刃）
2-flute / 3-flute / 4-flute
(it can be straight edge / helical edge)

※必要可带穿透&不穿透，不同等级加工的中空、空芯内孔加工。
With or without penetration, hollow & hollow core inner hole process with different grades.
必要に応じて、貫通付き&貫通なし、各レベル加工での中空、中空内穴加工。

★可超硬、超精研磨. 任意的柄部類型. 芯厚. 容屑槽寬度. 刃背方式. 鑽尖方式. 内冷却孔方式. 刃部結構. 刃口角度. 刃口鋒利程度之要求. 及高可至±0.003mm（3μm）的尺寸公差要求 We can produce with super hard and super finish grinding and satisfy your requirement of any type of shank, web thickness, width of chip flute, land, drill tip,inner cooling hole, structure of cutting edge, angle of cutting edge, degree of sharpness of cutting edge, and the dimension tolerance can be up to ±0.003mm（3μm）

醫用工具及配件系列（種植牙鑽頭、鑽針、工具）
Medical tools and parts series(dental implant drill bit, drill needle, tools)
医療器具及び部品シリーズ（インプラントドリルヘッド、ドリルピン、工具）

（超高防銹高耐磨（AA）&高精密特殊非標成型）
(unltra-high anti-rust(AA)&high precision special nonstandard forming)
超防錆高耐磨耗(AA)&高精密特殊非標準成型

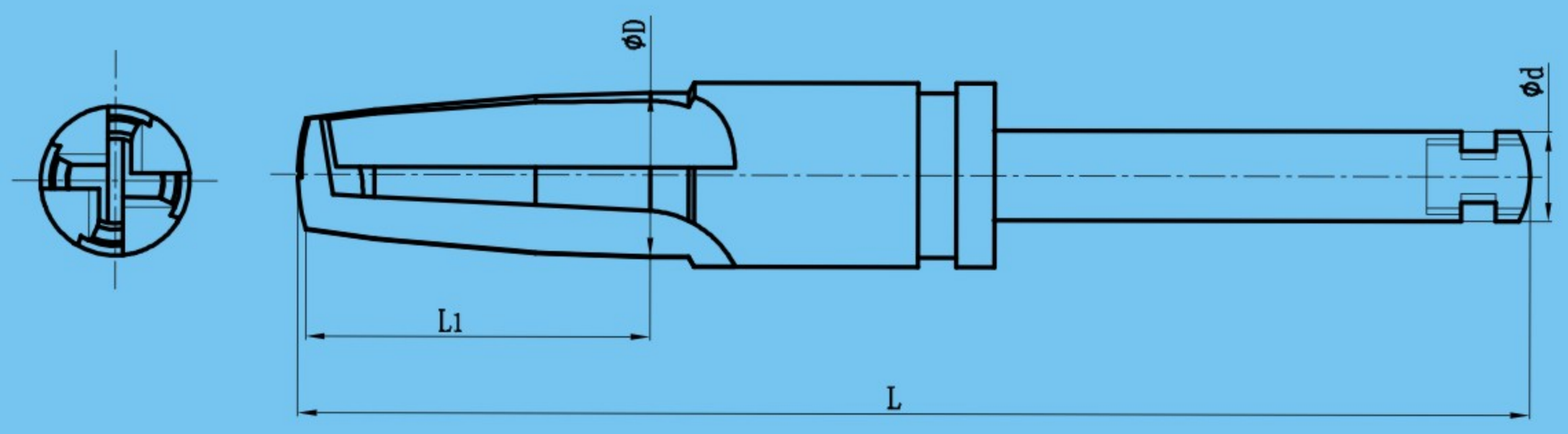

部分尺寸 some size

	刃徑ΦD Diameter	3.4	3.8	4.3	5.0
	刃長L1 Length of cut	15	15	15	15
	柄徑Φd Shank Dia.	2.35	2.35	2.35	2.35
	總長L Overall length	38	38	38	38
	刃數Z No. of flute	4	4	4	4



深槽至頂、可堆屑至槽頂。（可黑色、黃色、全亞光、全亮光、部分亞光+部分亮光等表面處理）

Deep groove to top, chip accumulation to the crest. (It can be with black, yellow, full matt, full shiny, partial matt + partial shiny and other surface treatment)

2刃/3刃/4刃
（可直刃/螺旋刃）

2-flute / 3-flute / 4-flute
(it can be straight edge / helical edge)

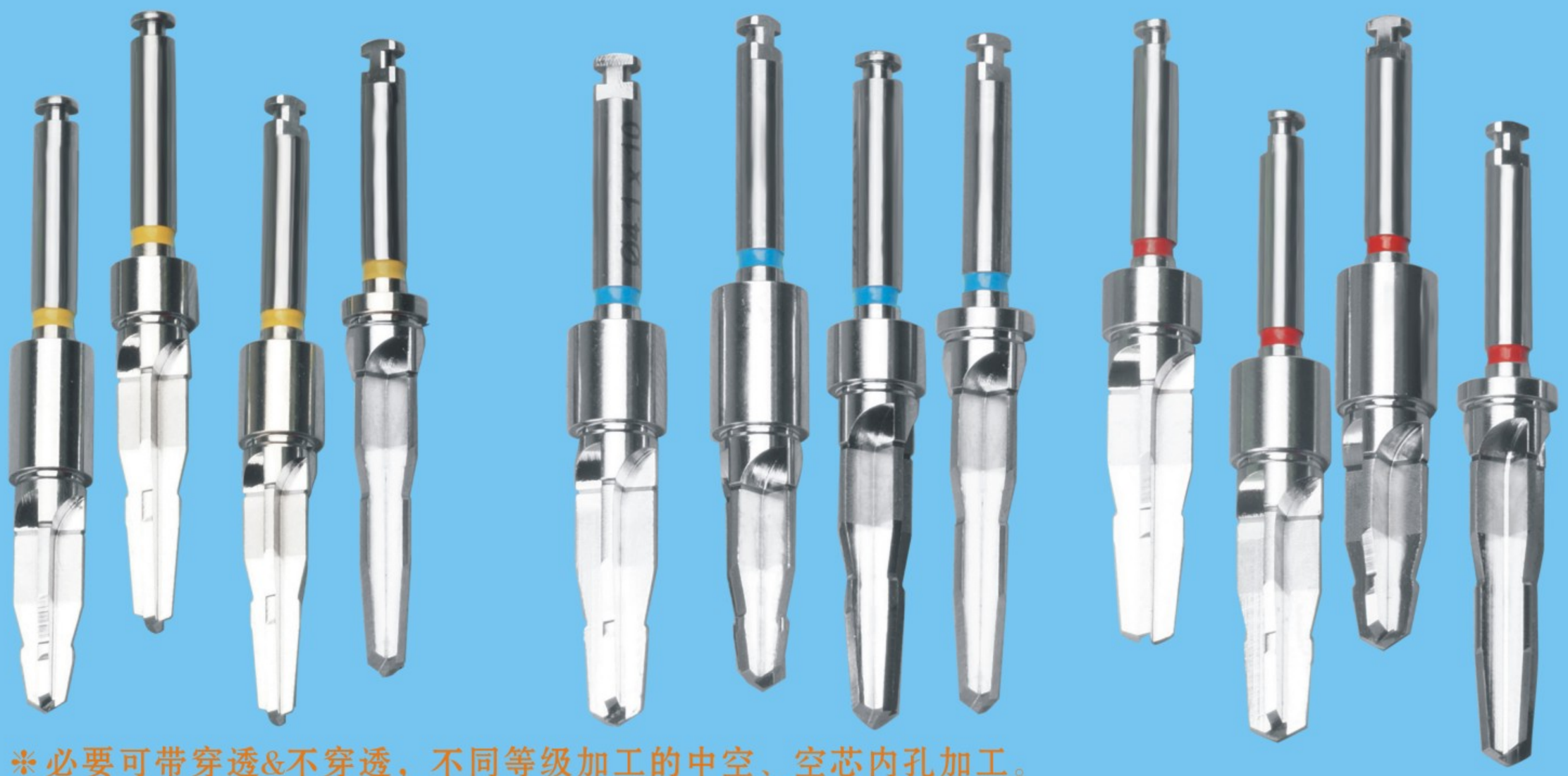

※必要可带穿透&不穿透，不同等级加工的中空、空芯内孔加工。
With or without penetration, hollow & hollow core inner hole process with different grades.
必要に応じて、貫通付き&貫通なし、各レベル加工での中空、中空内穴加工。

★可超硬、超精研磨.任意的柄部類型.芯厚.容屑槽寬度.刃背方式.鑽尖方式.內冷却孔方式.刃部結構.刃口角度.刃口鋒利程度之要求.及高可至±0.003mm（3μm）的尺寸公差要求 We can produce with super hard and super finish grinding and satisfy your requirement of any type of shank, web thickness, width of chip flute, land, drill tip,inner cooling hole, structure of cutting edge, angle of cutting edge, degree of sharpness of cutting edge, and the dimension tolerance can be up to ±0.003mm（3μm）

醫用工具及配件系列(成型鑽)
Medical tools and parts series(Profile drill)
医療器具及び部品シリーズ（成型ドリル）

（超高防銹高耐磨（AA）&高精密特殊非標成型）
(unltra-high anti-rust(AA)&high precision special nonstandard forming)
超防錆高耐磨耗(AA)&高精密特殊非標準成型

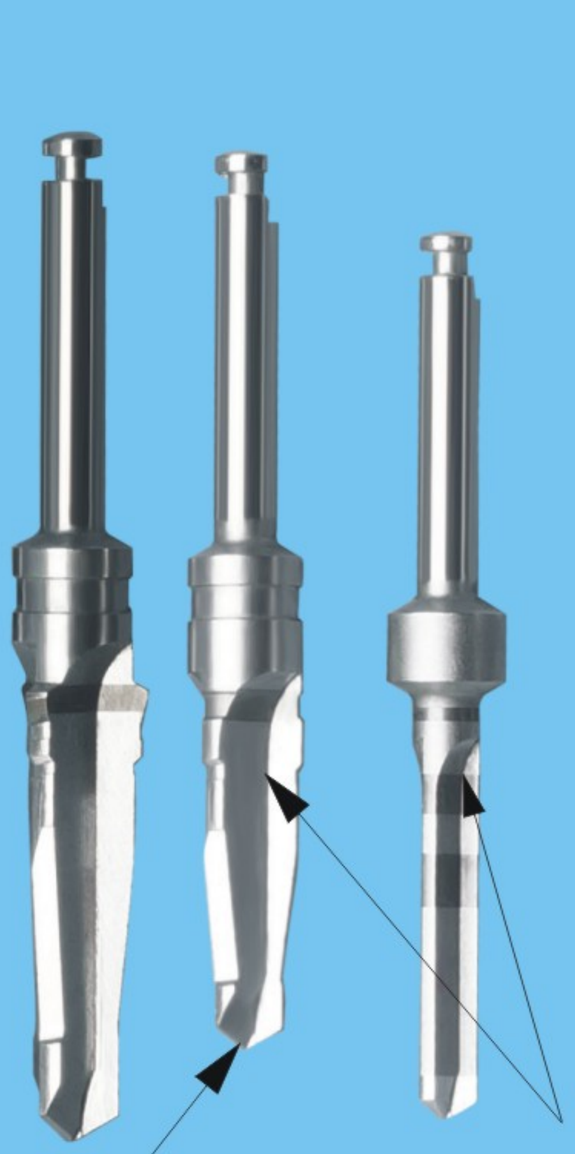

2刃/3刃/4刃
（可直刃/螺旋刃）
2-flute / 3-flute / 4-flute
(it can be straight edge / helical edge)

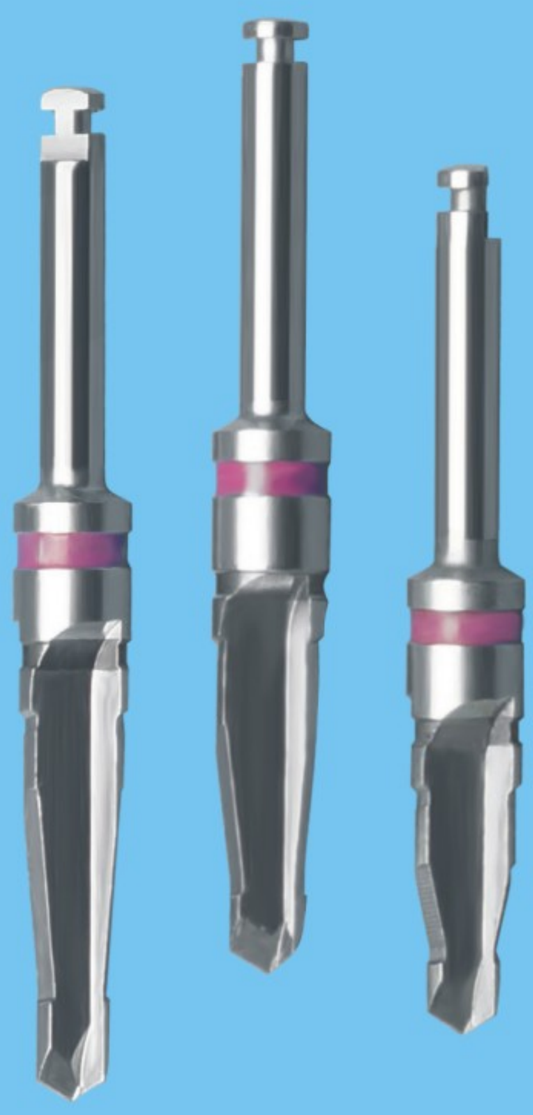

深槽至頂、可堆屑至槽頂。（可黑色、黄色、全亞光、全亮光、部分亞光+部分亮光等表面處理）
Deep groove to top, chip accumulation to the crest. (It can be with black, yellow, full matt, full shiny, partial matt + partial shiny and other surface treatment)

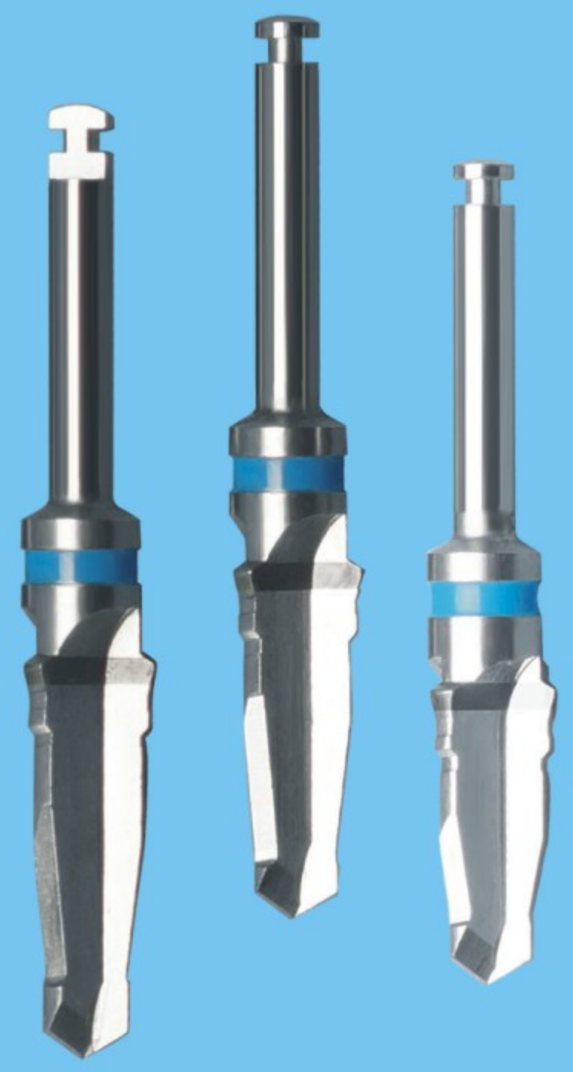

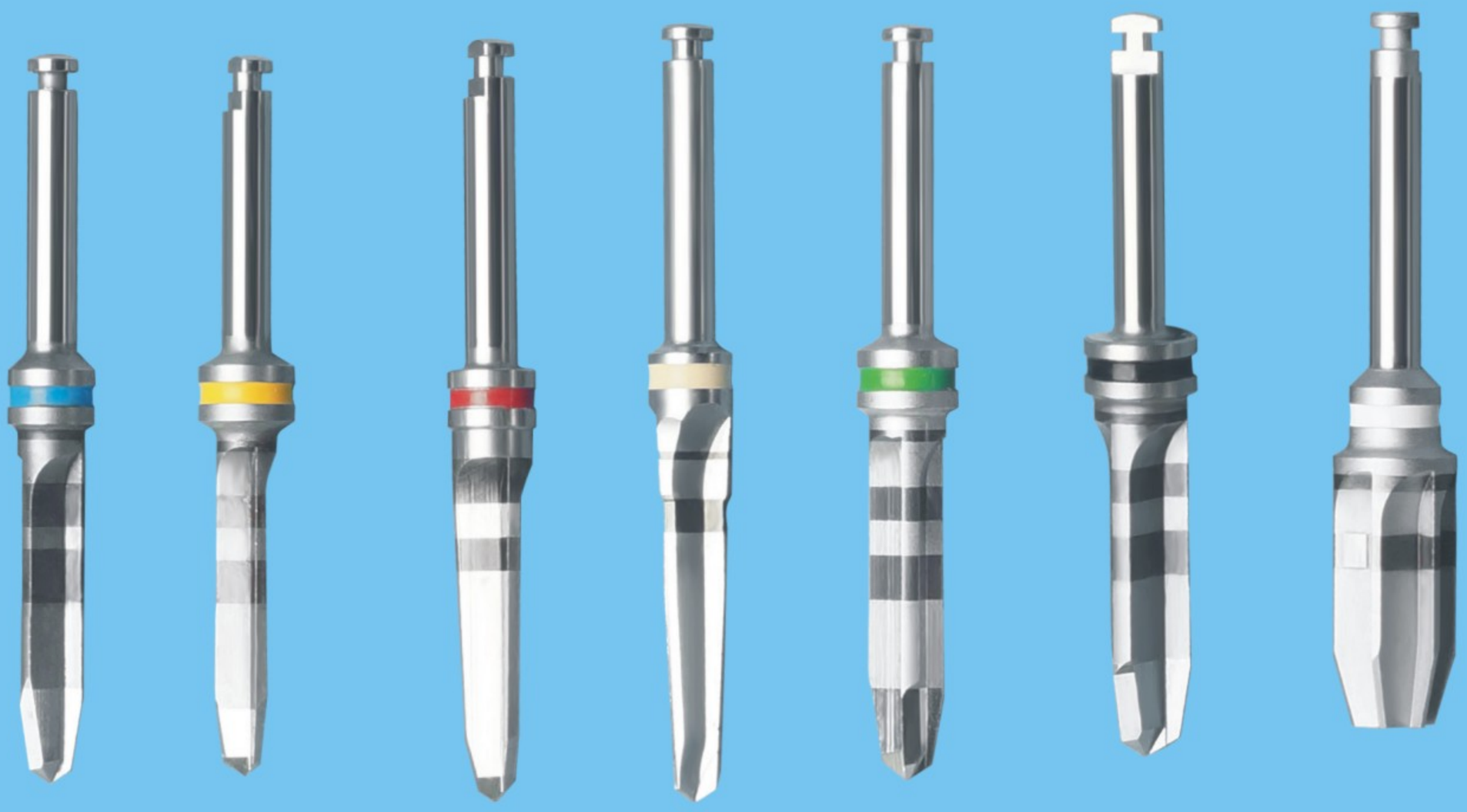

＊必要可带穿透&不穿透，不同等级加工的中空、空芯内孔加工。
With or without penetration, hollow & hollow core inner hole process with different grades.
必要に応じて、貫通付き&貫通なし、各レベル加工での中空、中空内穴加工。

★可超硬、超精研磨.任意的柄部類型.芯厚.容屑槽寬度.刃背方式.鑽尖方式.内冷却孔方式.刃部結構.刃口角度.刃口鋒利程度之要求.及高可至±0.003mm（3μm）的尺寸公差要求 We can produce with super hard and super finish grinding and satisfy your requirement of any type of shank, web thickness, width of chip flute, land, drill tip,inner cooling hole, structure of cutting edge, angle of cutting edge, degree of sharpness of cutting edge, and the dimension tolerance can be up to ±0.003mm（3μm）

LZQ

醫用工具及配件系列(内冷却孔鑽頭)
Medical tools and parts series(Drill with internal cooling hole)
医療器具及び部品シリーズ（内冷却穴ドリルヘッド)

（超高防銹高耐磨（AA）&高精密特殊非標成型）
(unltra-high anti-rust(AA)&high precision special nonstandard forming)
超防錆高耐磨耗(AA)&高精密特殊非標準成型

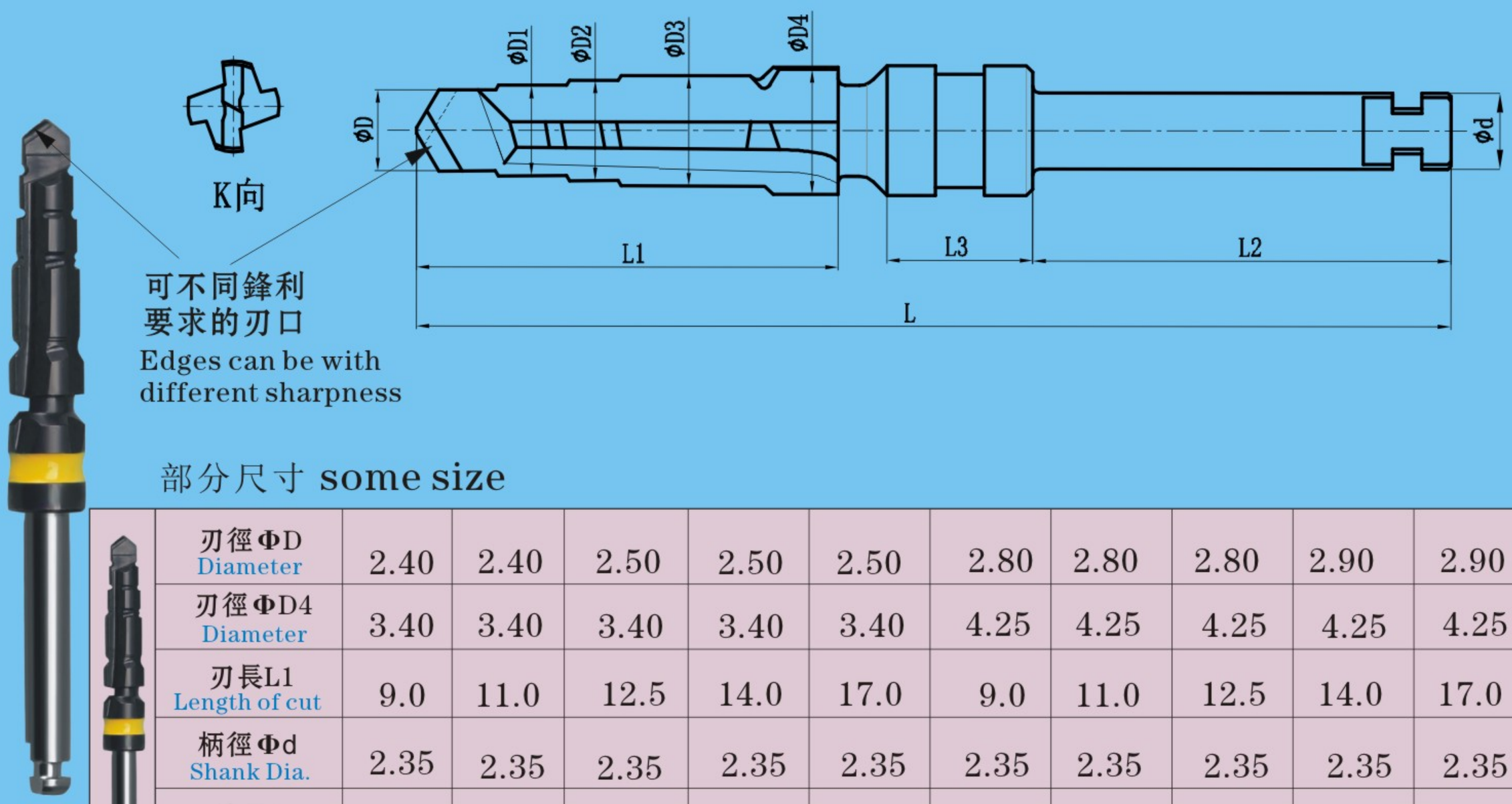

部分尺寸 some size

刃徑ΦD Diameter	2.40	2.40	2.50	2.50	2.50	2.80	2.80	2.80	2.90	2.90
刃徑ΦD4 Diameter	3.40	3.40	3.40	3.40	3.40	4.25	4.25	4.25	4.25	4.25
刃長L1 Length of cut	9.0	11.0	12.5	14.0	17.0	9.0	11.0	12.5	14.0	17.0
柄徑Φd Shank Dia.	2.35	2.35	2.35	2.35	2.35	2.35	2.35	2.35	2.35	2.35
總長L Overall length	28.25	30.85	32.35	33.85	36.85	28.25	30.85	32.35	33.85	36.85
刃數Z No. of flute	4	4	4	4	4	4	4	4	4	4

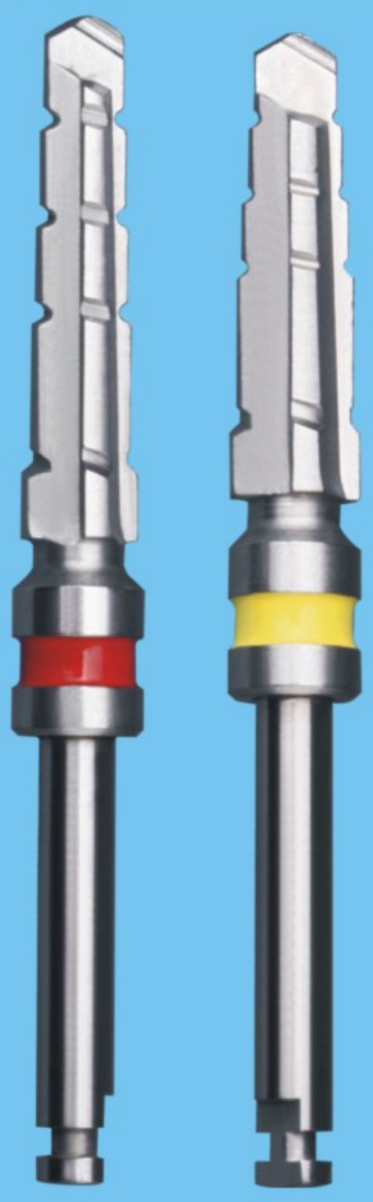

刃徑ΦD Diameter	3.50	3.50	3.50	3.50	3.50
刃徑ΦD4 Diameter	4.90	4.90	4.90	4.90	4.90
刃長L1 Length of cut	9.0	11.0	12.5	14.0	17.0
柄徑Φd Shank Dia.	2.35	2.35	2.35	2.35	2.35
總長L Overall length	28.25	30.85	32.35	33.85	36.85
刃數Z No. of flute	4	4	4	4	4

※必要可带穿透&不穿透，不同等级加工的中空、空芯内孔加工。
With or without penetration, hollow & hollow core inner hole process with different grades.
必要に応じて、貫通付き&貫通なし、各レベル加工での中空、中空内穴加工。

★可超硬、超精研磨.任意的柄部類型.芯厚.容屑槽寬度.刃背方式.鑽尖方式.内冷却孔方式.刃部結構.刃口角度.刃口鋒利程度之要求.及高可至±0.003mm（3μm）的尺寸公差要求 We can produce with super hard and super finish grinding and satisfy your requirement of any type of shank, web thickness, width of chip flute, land, drill tip,inner cooling hole, structure of cutting edge, angle of cutting edge, degree of sharpness of cutting edge, and the dimension tolerance can be up to ±0.003mm（3μm）

★、各種鑽頭鑽套可以采用任意材料及幾何形狀、成型超精、超硬研磨

Every drill and stopper can be made with any material and to be ground to any eometrical shape by super finish and super hard grinding

※必要可带穿透&不穿透，不同等级加工的中空、空芯内孔加工。
With or without penetration, hollow & hollow core inner hole process with different grades.
必要に応じて、貫通付き&貫通なし、各レベル加工での中空、中空内穴加工。

种植牙顺序图
Implant sequence diagram

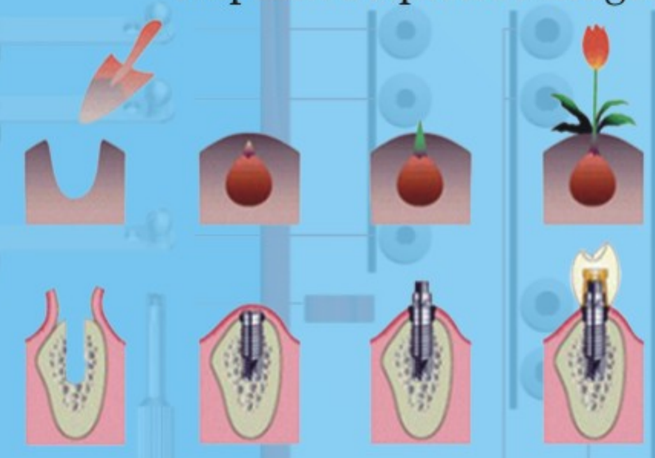

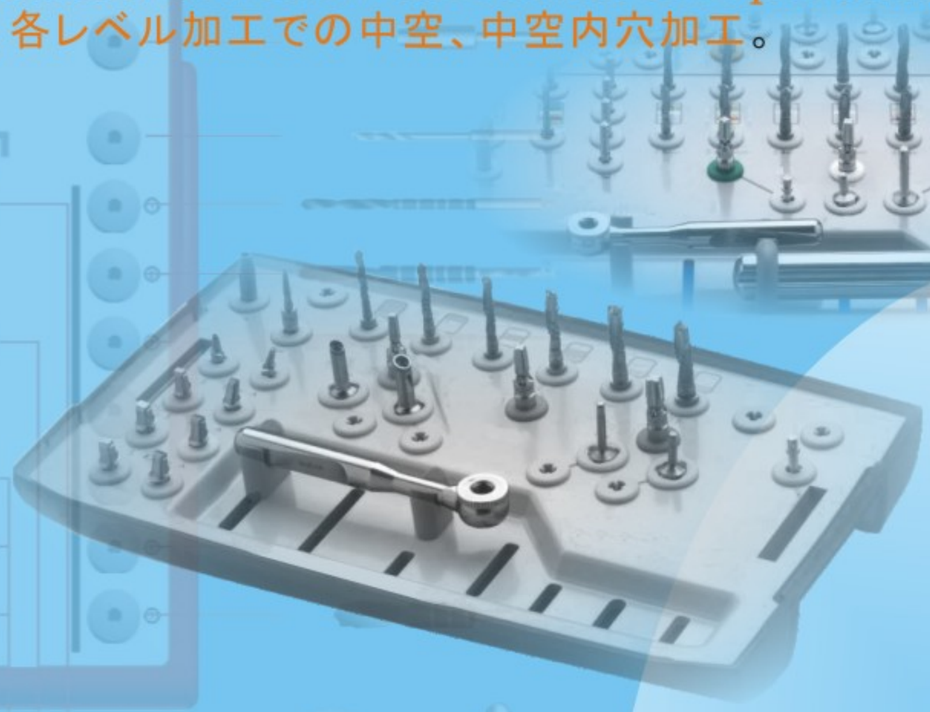





★可超硬、超精研磨.任意的柄部類型.芯厚.容屑槽寬度.刃背方式.鑽尖方式.内冷却孔方式.刃部結構.刃口角度.刃口鋒利程度之要求.及高可至±0.003mm（3μm）的尺寸公差要求 We can produce with super hard and super finish grinding and satisfy your requirement of any type of shank, web thickness, width of chip flute, land, drill tip,inner cooling hole, structure of cutting edge, angle of cutting edge, degree of sharpness of cutting edge, and the dimension tolerance can be up to ±0.003mm（3μm）

醫用工具及配件系列(内冷却孔鑽頭)
Medical tools and parts series(Drill with internal cooling hole)
医療器具及び部品シリーズ（内冷却穴ドリルヘッド）

（超高防銹高耐磨（AA）&高精密特殊非標成型）
(unltra-high anti-rust(AA)&high precision special nonstandard forming)
超防錆高耐磨耗(AA)&高精密特殊非標準成型

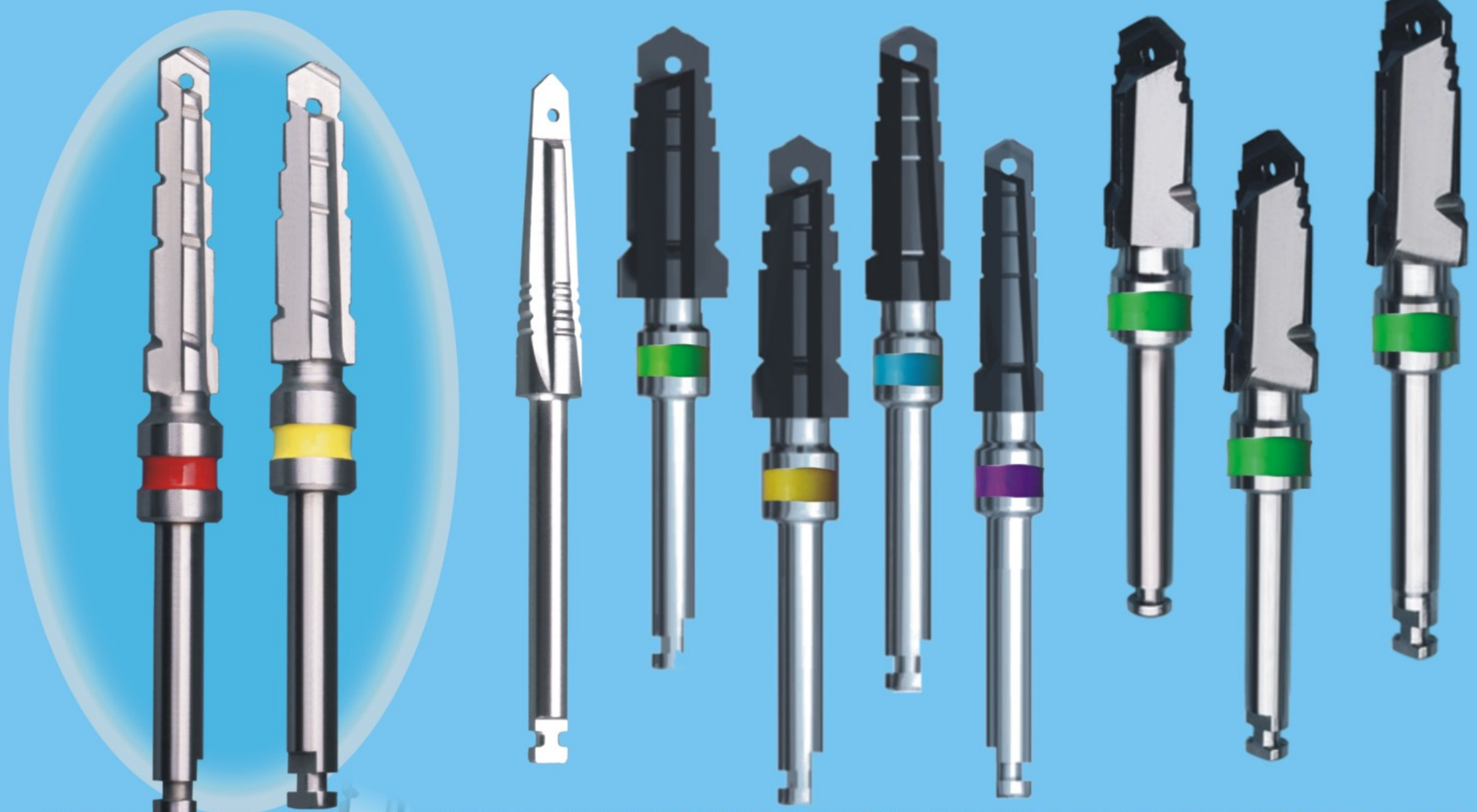

可任意鋒利程度的刃口（角度） Any sharpness cutting edge(angle)

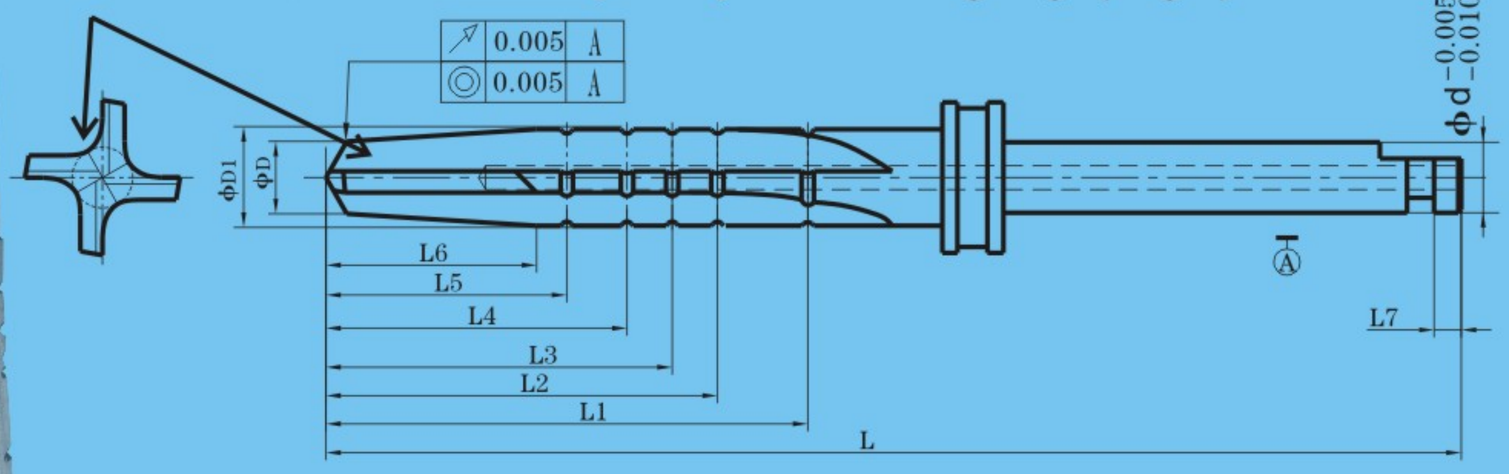



部分尺寸some sizes



刃徑ΦD Diameter	2.0	2.0	2.4	2.6	3.2	3.8	4.6
刃徑ΦD1 Diameter	2.0	2.9	3.2	3.65	4.1	4.6	5.3
有效刃長L1 Effective length of cutting edge 刃の長さ	16	16	16	16	16	16	16
柄徑Φd Shank Dia.	2.35	2.35	2.35	2.35	2.35	2.35	2.35
總長L Overall length 総長さ	37.7	37.7	37.7	37.7	37.7	37.7	37.7
刃數Z No.of flute	4	4	4	4	4	4	4

★、可以生产内冲水孔（内冷冲孔）,也可以生产不要内冲水孔的。Either with inner punching hole (inner cooling hole) or without inner punching hole.

※必要可带穿透&不穿透，不同等级加工的中空、空芯内孔加工。
With or without penetration, hollow & hollow core inner hole process with different grades.
必要に応じて、貫通付き&貫通なし、各レベル加工での中空、中空内穴加工。

★可超硬、超精研磨、任意的柄部類型、芯厚、容屑槽寬度、刃背方式、鑽尖方式、内冷却孔方式、刃部結構、刃口角度、刃口鋒利程度之要求，及高可至±0.003mm（3μm）的尺寸公差要求 We can produce with super hard and super finish grinding and satisfy your requirement of any type of shank, web thickness, width of chip flute, land, drill tip,inner cooling hole, structure of cutting edge, angle of cutting edge, degree of sharpness of cutting edge, and the dimension tolerance can be up to ±0.003mm（3μm）

醫用工具及配件系列(内冷却孔鑽頭)
Medical tools and parts series(Drill with internal cooling hole)
医療器具及び部品シリーズ（内冷却穴ドリルヘッド)

（超高防銹高耐磨（AA）&高精密特殊非標成型）
(unltra-high anti-rust(AA)&high precision special nonstandard forming)
超防錆高耐磨耗(AA)&高精密特殊非標準成型



※必要可带穿透&不穿透，不同等级加工的中空、空芯内孔加工。
With or without penetration, hollow & hollow core inner hole process with different grades.
必要に応じて、貫通付き&貫通なし、各レベル加工での中空、中空内穴加工。

★可超硬、超精研磨.任意的柄部類型.芯厚.容屑槽寬度.刃背方式.鑽尖方式.内冷却孔方式.刃部結構.刃口角度.刃口鋒利程度之要求.及高可至±0.003mm（3μm）的尺寸公差要求 We can produce with super hard and super finish grinding and satisfy your requirement of any type of shank, web thickness, width of chip flute, land, drill tip,inner cooling hole, structure of cutting edge, angle of cutting edge, degree of sharpness of cutting edge, and the dimension tolerance can be up to ±0.003mm（3μm）

LZQ

可依要求研磨鋒利程度 We can grind the sharpness according to your requirement.



★、各種鑽頭鑽套可以采用任意材料及幾何形狀、成型超精、超硬研磨
All drills and stoppers can be made with any material or into any geometrical shape by profile superfinishing and superhard grinding



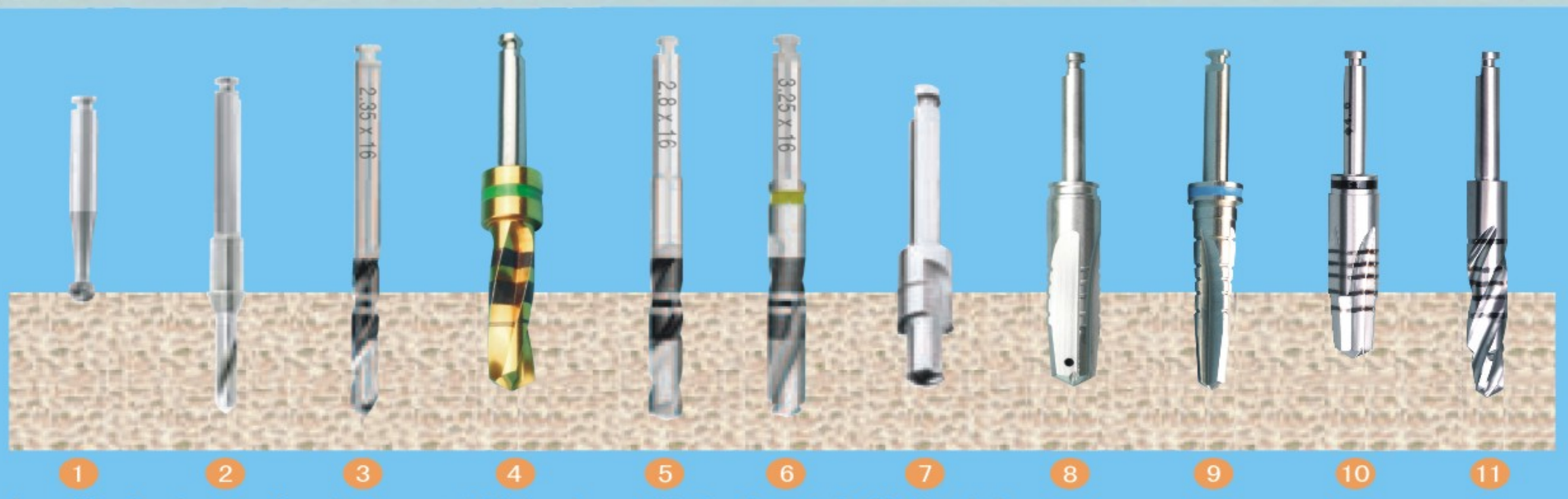

※必要可带穿透&不穿透，不同等级加工的中空、空芯内孔加工。
With or without penetration, hollow & hollow core inner hole process with different grades.
必要に応じて、貫通付き&貫通なし、各レベル加工での中空、中空内穴加工。

★可超硬、超精研磨，任意的柄部類型、芯厚、容屑槽寬度、刃背方式、鑽尖方式、内冷却孔方式、刃部結構、刃口角度、刃口鋒利程度之要求，及高可至±0.003mm（3μm）的尺寸公差要求 We can produce with super hard and super finish grinding and satisfy your requirement of any type of shank, web thickness, width of chip flute, land, drill tip,inner cooling hole, structure of cutting edge, angle of cutting edge, degree of sharpness of cutting edge, and the dimension tolerance can be up to ±0.003mm（3μm）

醫用工具及配件系列(鑽頭)
Medical tools and parts series(Drill)
医療器具及び部品シリーズ(ドリルヘッド)

（超高防銹高耐磨（AA）&高精密特殊非標成型）
(unltra-high anti-rust(AA)&high precision special nonstandard forming)
超防錆高耐磨耗(AA)&高精密特殊非標準成型

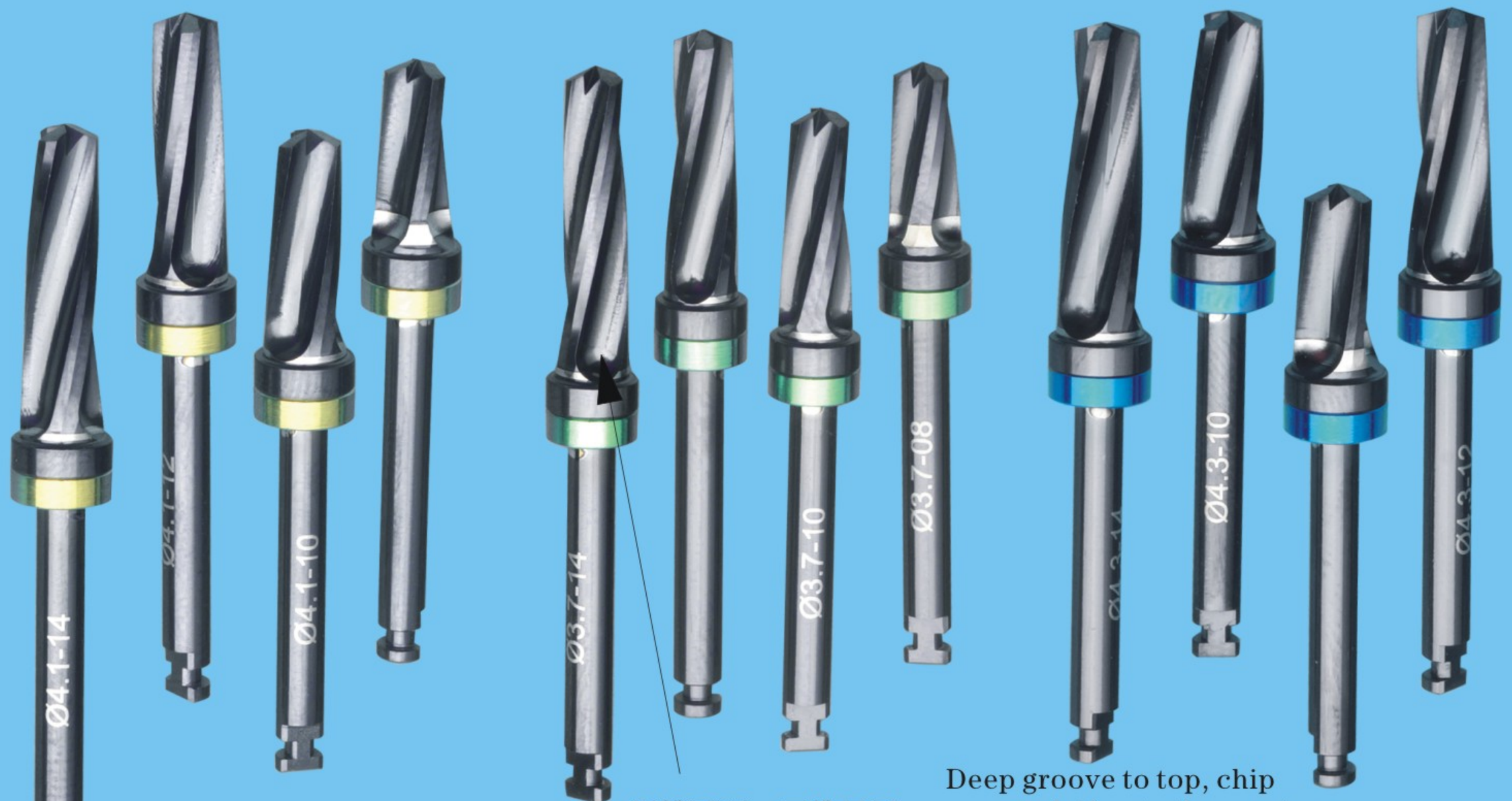

深槽至頂、可堆屑至槽頂。（可黑色、黄色、全亞光、全亮光、部分亞光+部分亮光等表面處理）

Deep groove to top, chip accumulation to the crest. (It can be with black, yellow, full matt, full shiny, partial matt + partial shiny and other surface treatment)

可爲2刃/3刃/4刃的螺旋刃
It can be 2-flute/3-flute / 4-flute helical edge



※必要可带穿透&不穿透，不同等级加工的中空、空芯内孔加工。
With or without penetration, hollow & hollow core inner hole process with different grades.
必要に応じて、貫通付き&貫通なし、各レベル加工での中空、中空内穴加工。

★可超硬、超精研磨.任意的柄部類型.芯厚.容屑槽寬度.刃背方式.鑽尖方式.内冷却孔方式.刃部結構.刃口角度.刃口鋒利程度之要求.及高可至±0.003mm（3μm）的尺寸公差要求 We can produce with super hard and super finish grinding and satisfy your requirement of any type of shank, web thickness, width of chip flute, land, drill tip,inner cooling hole, structure of cutting edge, angle of cutting edge, degree of sharpness of cutting edge, and the dimension tolerance can be up to ±0.003mm（3μm）

LZQ

醫用工具及配件系列(引導鑽頭)
Medical tools and parts series(Guided drill)
医療器具及び部品シリーズ（ガイドドリルヘッド)

（超高防銹高耐磨（AA）&高精密特殊非標成型）
(unltra-high anti-rust(AA)&high precision special nonstandard forming)
超防錆高耐磨耗(AA)&高精密特殊非標準成型

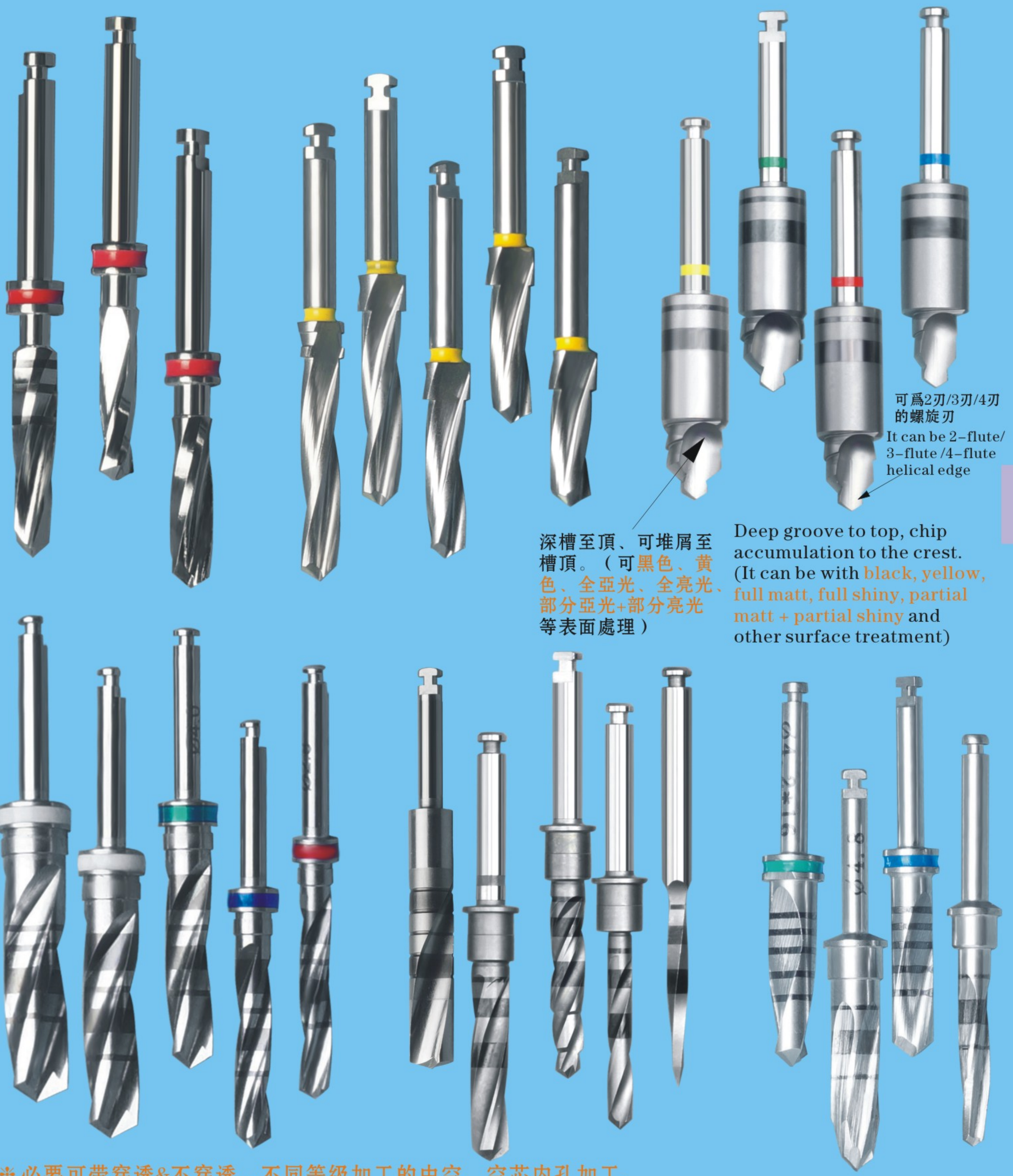

※必要可带穿透&不穿透，不同等级加工的中空、空芯内孔加工。
With or without penetration, hollow & hollow core inner hole process with different grades.
必要に応じて、貫通付き&貫通なし、各レベル加工での中空、中空内穴加工。

★可超硬、超精研磨.任意的柄部類型.芯厚.容屑槽寬度.刃背方式.鑽尖方式.内冷却孔方式.刃部結構.刃口角度.刃口鋒利程度之要求.及高可至±0.003mm（3μm）的尺寸公差要求 We can produce with super hard and super finish grinding and satisfy your requirement of any type of shank, web thickness, width of chip flute, land, drill tip,inner cooling hole, structure of cutting edge, angle of cutting edge, degree of sharpness of cutting edge, and the dimension tolerance can be up to ±0.003mm（3μm）

LZQ

醫用工具及配件系列(鑽頭)
Medical tools and parts series(Drill)
医療器具及び部品シリーズ(ドリルヘッド)

（超高防銹高耐磨（AA）&高精密特殊非標成型）
(unltra-high anti-rust(AA)&high precision special nonstandard forming)
超防錆高耐磨耗(AA)&高精密特殊非標準成型



深槽至頂、可堆屑至槽頂。（可黑色、黄色、全亞光、全亮光、部分亞光+部分亮光等表面處理）

Deep groove to top, chip accumulation to the crest. (It can be with black, yellow, full matt, full shiny, partial matt + partial shiny and other surface treatment)

可爲3刃/4刃的直刃
It can be 3-flute / 4-flute straight edge



※必要可带穿透&不穿透，不同等级加工的中空、空芯内孔加工。
With or without penetration, hollow & hollow core inner hole process with different grades.
必要に応じて、貫通付き&貫通なし、各レベル加工での中空、中空内穴加工。

★可超硬、超精研磨，任意的柄部類型、芯厚、容屑槽寬度、刃背方式、鑽尖方式、内冷却孔方式、刃部結構、刃口角度、刃口鋒利程度之要求，及高可至±0.003mm（3μm）的尺寸公差要求 We can produce with super hard and super finish grinding and satisfy your requirement of any type of shank, web thickness, width of chip flute, land, drill tip,inner cooling hole, structure of cutting edge, angle of cutting edge, degree of sharpness of cutting edge, and the dimension tolerance can be up to ±0.003mm（3μm）

LZQ

醫用工具及配件系列(鑽頭)
Medical tools and parts series(Drill)
医療器具及び部品シリーズ(ドリルヘッド)

（超高防銹高耐磨（AA）&高精密特殊非標成型）
(unltra-high anti-rust(AA)&high precision special nonstandard forming)
超防錆高耐磨耗(AA)&高精密特殊非標準成型



※必要可带穿透&不穿透，不同等级加工的中空、空芯内孔加工。
With or without penetration, hollow & hollow core inner hole process with different grades.
必要に応じて、貫通付き&貫通なし、各レベル加工での中空、中空内穴加工。

★可超硬、超精研磨，任意的柄部類型、芯厚、容屑槽寬度、刃背方式、鑽尖方式、内冷却孔方式、刃部結構、刃口角度、刃口鋒利程度之要求，及高可至±0.003mm（3μm）的尺寸公差要求 We can produce with super hard and super finish grinding and satisfy your requirement of any type of shank, web thickness, width of chip flute, land, drill tip,inner cooling hole, structure of cutting edge, angle of cutting edge, degree of sharpness of cutting edge, and the dimension tolerance can be up to ±0.003mm（3μm）

醫用工具及配件系列(鑽頭)
Medical tools and parts series(Drill)
医療器具及び部品シリーズ(ドリルヘッド)

（超高防銹高耐磨（AA）&高精密特殊非標成型）
(unltra-high anti-rust(AA)&high precision special nonstandard forming)
超防錆高耐磨耗(AA)&高精密特殊非標準成型

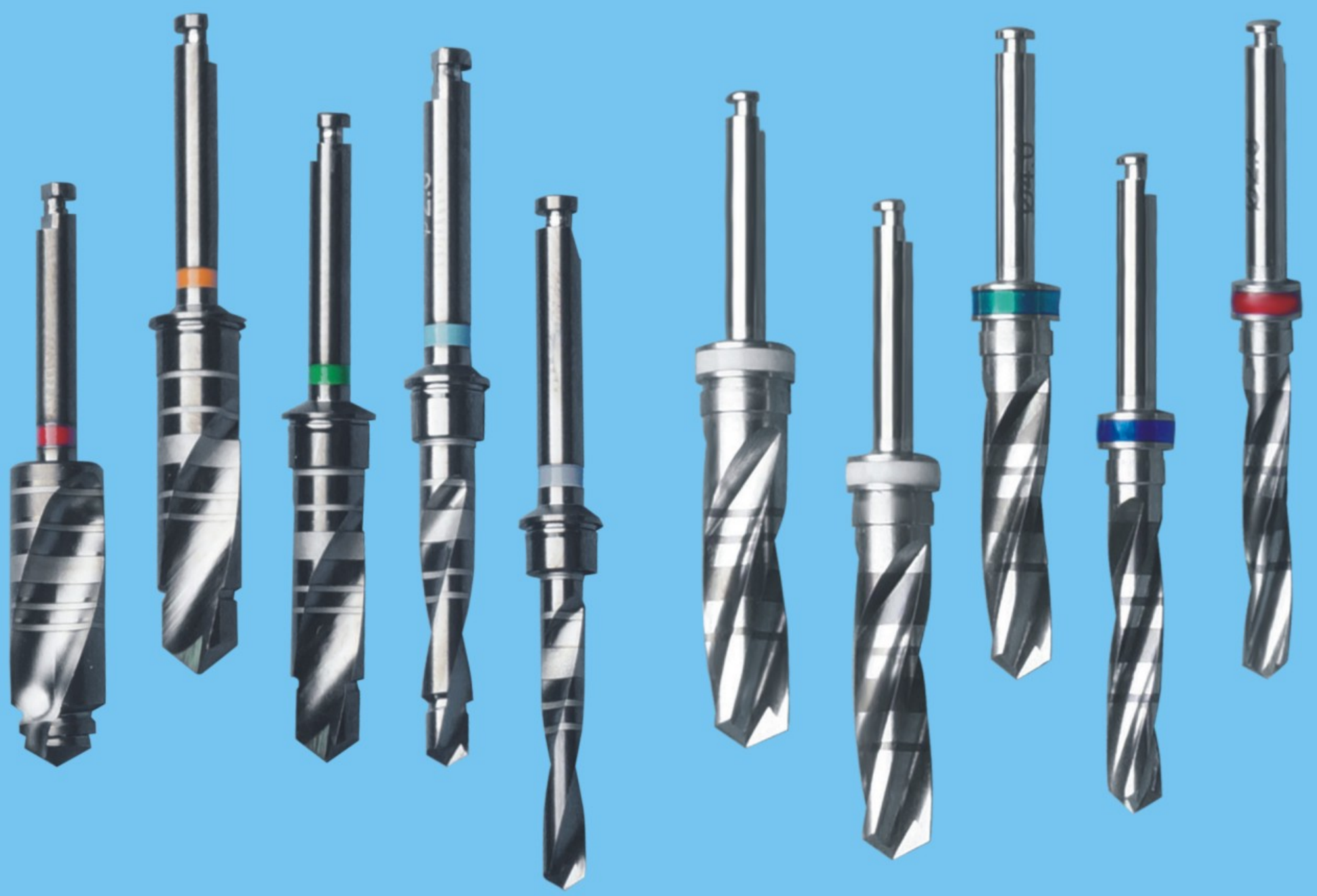

★、各種鑽頭鑽套可以采用任意材料及幾何形狀、成型超精、超硬研磨

All drills and stoppers can be made with any material or into any geometrical shape by profile superfinishing and superhard grinding



※必要可带穿透&不穿透，不同等级加工的中空、空芯内孔加工。
With or without penetration, hollow & hollow core inner hole process with different grades.
必要に応じて、貫通付き&貫通なし、各レベル加工での中空、中空内穴加工。

★可超硬、超精研磨，任意的柄部類型，芯厚，容屑槽寬度，刃背方式，鑽尖方式，内冷却孔方式，刃部結構，刃口角度，刃口鋒利程度之要求，及高可至±0.003mm（3μm）的尺寸公差要求 We can produce with super hard and super finish grinding and satisfy your requirement of any type of shank, web thickness, width of chip flute, land, drill tip,inner cooling hole, structure of cutting edge, angle of cutting edge, degree of sharpness of cutting edge, and the dimension tolerance can be up to ±0.003mm（3μm）

LZQ



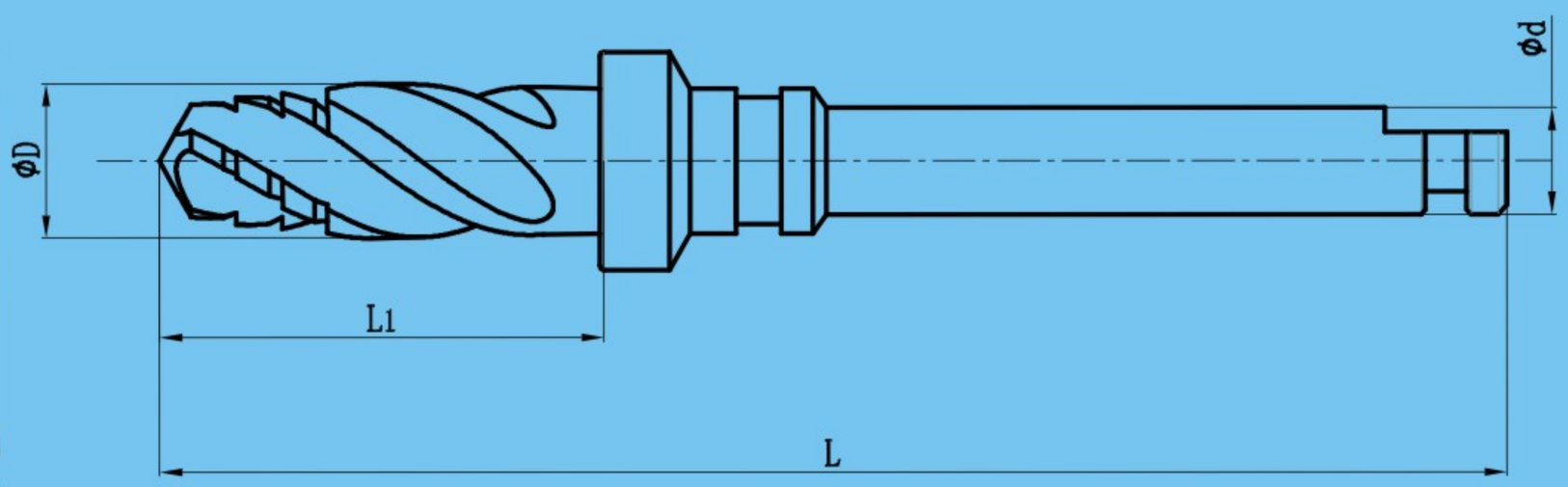

部分尺寸 some size

	刃徑ΦD Diameter	2.3	3.1	3.4	3.9	5.4
	刃長L1 Length of cut	12.7	12.7	12.7	12.7	12.7
	柄徑Φd Shank Dia.	2.35	2.35	2.35	2.35	2.35
	總長L Overall length	32.70	32.70	32.70	32.70	32.70
	刃數Z No. of flute	3	3	3	3	3





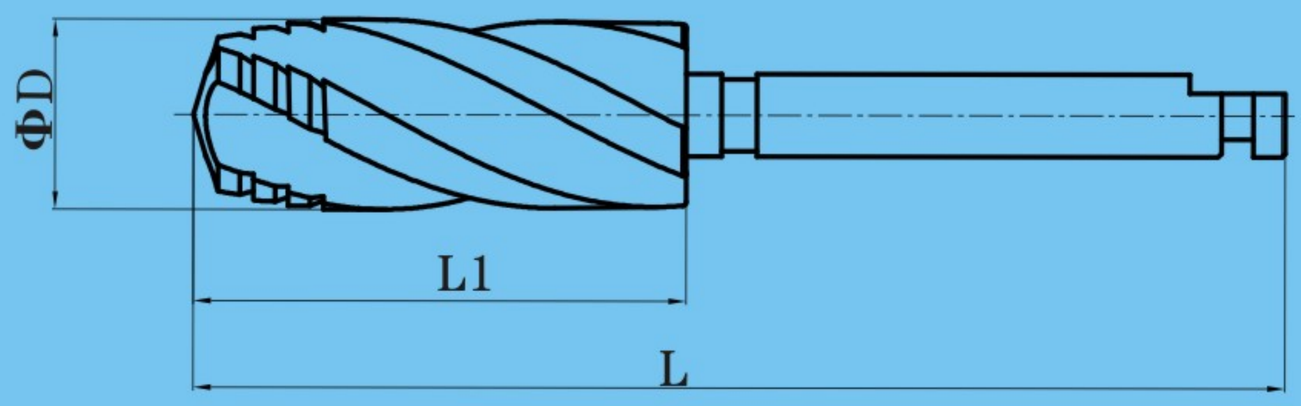

多階梯鑽入，
入鑽不易跳動
Multi-step drilling, which
is not easy to cause runout.

※必要可带穿透&不穿透，不同等级加工的中空、空芯内孔加工。
With or without penetration, hollow & hollow core inner hole process with different grades.
必要に応じて、貫通付き&貫通なし、各レベル加工での中空、中空内穴加工。

★可超硬、超精研磨，任意的柄部類型，芯厚，容屑槽寬度，刃背方式，鑽尖方式，内冷却孔方式，刃部結構，刃口角度，刃口鋒利程度之要求，及高可至±0.003mm（3μm）的尺寸公差要求 We can produce with super hard and super finish grinding and satisfy your requirement of any type of shank, web thickness, width of chip flute, land, drill tip,inner cooling hole, structure of cutting edge, angle of cutting edge, degree of sharpness of cutting edge, and the dimension tolerance can be up to ±0.003mm（3μm）

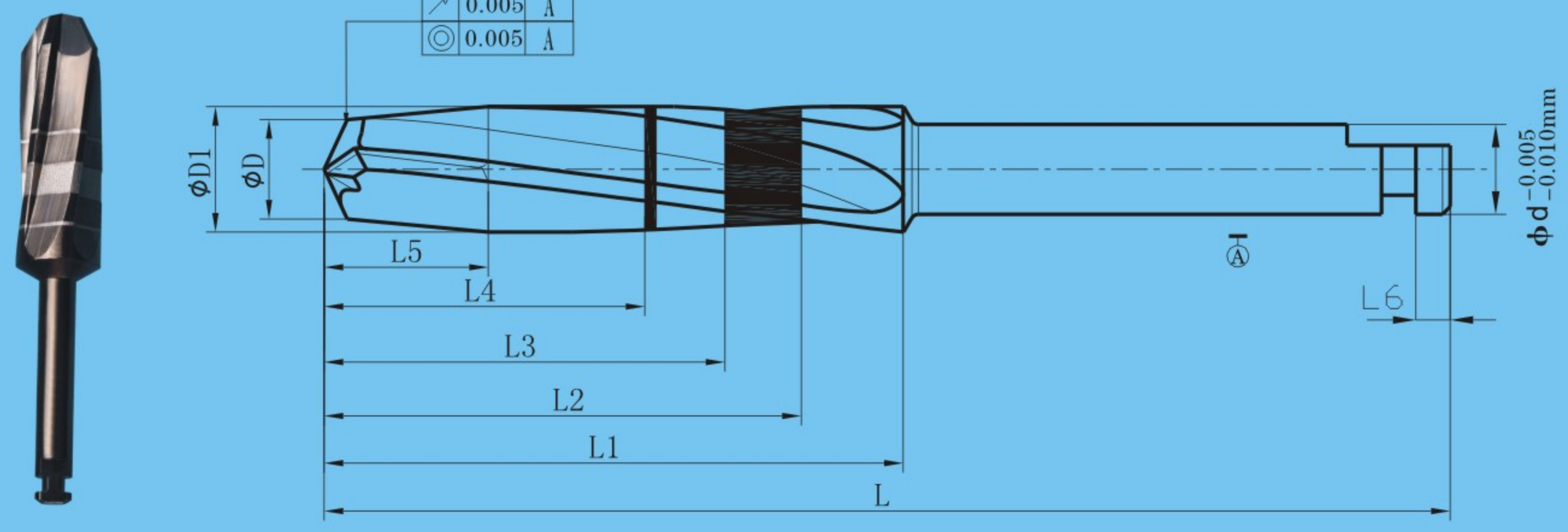

部分尺寸some sizes



刃徑 ΦD Diameter	2.0	2.0	2.0	2.0	2.0	2.3	2.3	2.3	2.3	2.3	2.75	2.75	2.75	2.75	2.75	3.0	3.0	3.0	3.0	3.0
刃長L1 Length of cut 刃の長さ	8.5	10	11.5	13	15	8.5	10	11.5	13	15	8.5	10	11.5	13	15	8.5	10	11.5	13	15
柄徑 Φd Shank Dia.	2.35	2.35	2.35	2.35	2.35	2.35	2.35	2.35	2.35	2.35	2.35	2.35	2.35	2.35	2.35	2.35	2.35	2.35	2.35	2.35
總長L Overall length 総長さ	37/ 42.5	37/ 42.5	37/ 42.5	37/ 42.5	37/ 42.5	37/ 42.5	37/ 42.5	37/ 42.5	37/ 42.5	37/ 42.5	37/ 42.5	37/ 42.5	37/ 42.5	37/ 42.5	37/ 42.5	37/ 42.5	37/ 42.5	37/ 42.5	37/ 42.5	37/ 42.5
丸數Z No.of flute	2/3	2/3	2/3	2/3	2/3	2/3	2/3	2/3	2/3	2/3	2/3	2/3	2/3	2/3	2/3	2/3	2/3	2/3	2/3	2/3

部分尺寸some sizes



刃徑 ΦD Diameter	3.15	3.15	3.15	3.15	3.15	3.25	3.25	3.25	3.25	3.25	4.25	4.25	4.25	4.25	4.25	5.25	5.25	5.25	5.25	5.25
刃長L1 Length of cut 刃の長さ	8.5	10	11.5	13	15	8.5	10	11.5	13	15	8.5	10	11.5	13	15	8.5	10	11.5	13	15
柄徑 Φd Shank Dia.	2.35	2.35	2.35	2.35	2.35	2.35	2.35	2.35	2.35	2.35	2.35	2.35	2.35	2.35	2.35	2.35	2.35	2.35	2.35	2.35
總長L Overall length 総長さ	37/ 42.5	37/ 42.5	37/ 42.5	37/ 42.5	37/ 42.5	37/ 42.5	37/ 42.5	37/ 42.5	37/ 42.5	37/ 42.5	37/ 42.5	37/ 42.5	37/ 42.5	37/ 42.5	37/ 42.5	37/ 42.5	37/ 42.5	37/ 42.5	37/ 42.5	37/ 42.5
丸數Z No.of flute	2/3	2/3	2/3	2/3	2/3	2/3	2/3	2/3	2/3	2/3	2/3	2/3	2/3	2/3	2/3	2/3	2/3	2/3	2/3	2/3

※必要可带穿透&不穿透，不同等级加工的中空、空芯内孔加工。
With or without penetration, hollow & hollow core inner hole process with different grades.
必要に応じて、貫通付き&貫通なし、各レベル加工での中空、中空内穴加工。

★可超硬、超精研磨.任意的柄部類型.芯厚.容屑槽寬度.刃背方式.鑽尖方式.内冷却孔方式.刃部結構.刃口角度.刃口鋒利程度之要求.及高可至±0.003mm（3μm）的尺寸公差要求 We can produce with super hard and super finish grinding and satisfy your requirement of any type of shank, web thickness, width of chip flute, land, drill tip,inner cooling hole, structure of cutting edge, angle of cutting edge, degree of sharpness of cutting edge, and the dimension tolerance can be up to ±0.003mm（3μm）

醫用工具及配件系列(鑽頭)
Medical tools and parts series(Drill)
医療器具及び部品シリーズ(ドリルヘッド)

（超高防銹高耐磨（AA）&高精密特殊非標成型）
(unltra-high anti-rust(AA)&high precision special nonstandard forming)
超防錆高耐磨耗(AA)&高精密特殊非標準成型



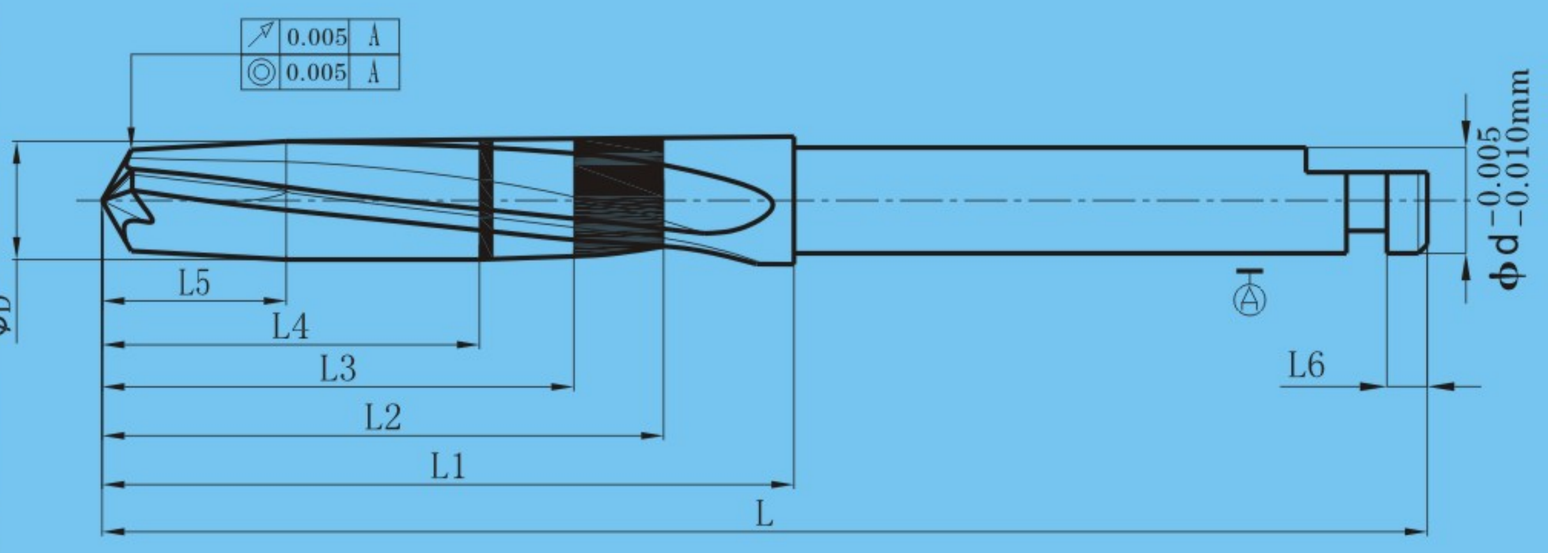

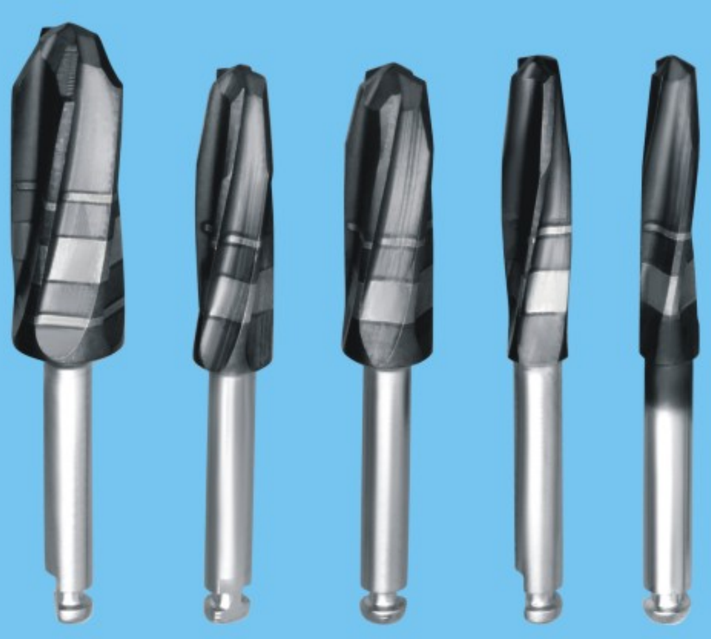

部分尺寸some sizes



刃徑ΦD Diameter	2.75	3.3	3.8	4.33	5.35
有效刃長L1 Effective length of cutting edge 刃の長さ	15.4	15.2	15	14.9	16.5
柄徑Φd Shank Dia.	2.35	2.35	2.35	2.35	2.35
總長L Overall length 総長さ	29.5	29.5	29.5	29.5	31.5
刃數Z No.of flute	3	4	5	5	5



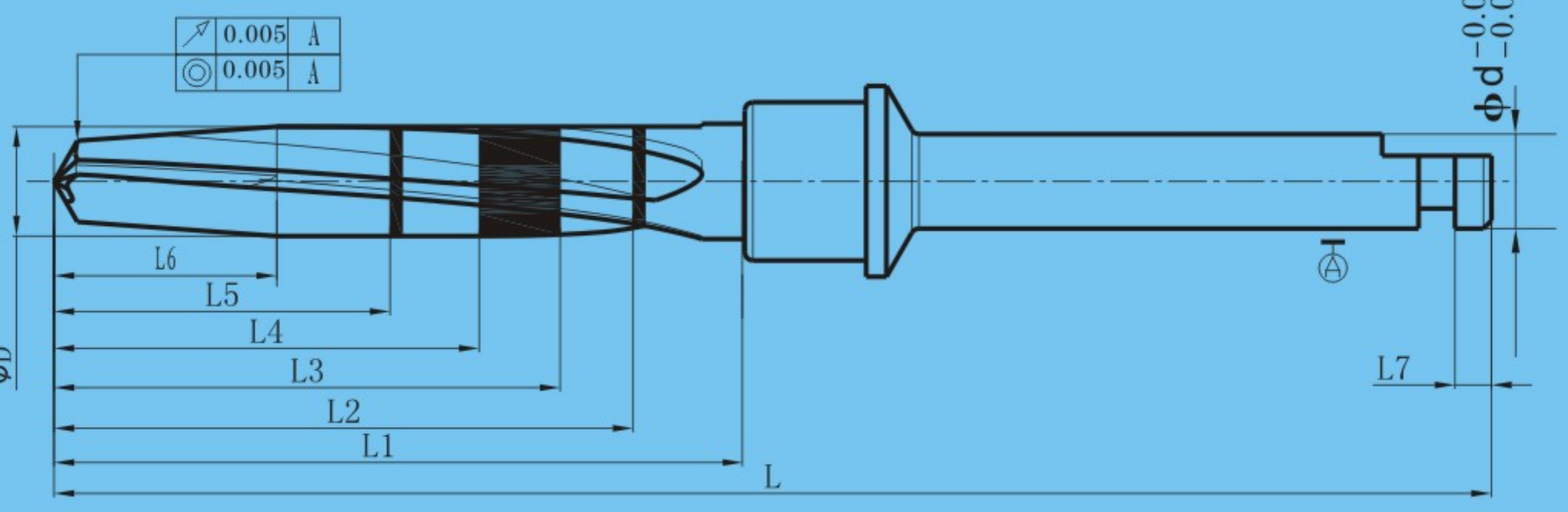

部分尺寸some sizes



刃徑ΦD Diameter	2.72	3.3	4.35
有效刃長L1 Effective length of cutting edge 刃の長さ	16	16	16
柄徑Φd Shank Dia.	2.35	2.35	2.35
總長L Overall length 総長さ	35.5	35.5	35.5
刃數Z No.of flute	3	4	5

※必要可带穿透&不穿透，不同等级加工的中空、空芯内孔加工。
With or without penetration, hollow & hollow core inner hole process with different grades.
必要に応じて、貫通付き&貫通なし、各レベル加工での中空、中空内穴加工。

★可超硬、超精研磨.任意的柄部類型.芯厚.容屑槽寬度.刃背方式.鑽尖方式.内冷却孔方式.刃部結構.刃口角度.刃口鋒利程度之要求.及高可至±0.003mm（3μm）的尺寸公差要求 We can produce with super hard and super finish grinding and satisfy your requirement of any type of shank, web thickness, width of chip flute, land, drill tip,inner cooling hole, structure of cutting edge, angle of cutting edge, degree of sharpness of cutting edge, and the dimension tolerance can be up to ±0.003mm（3μm）

Passivated edge (A) & Sharp edge (B)

鈍化刃（A）&鋒利刃（B）

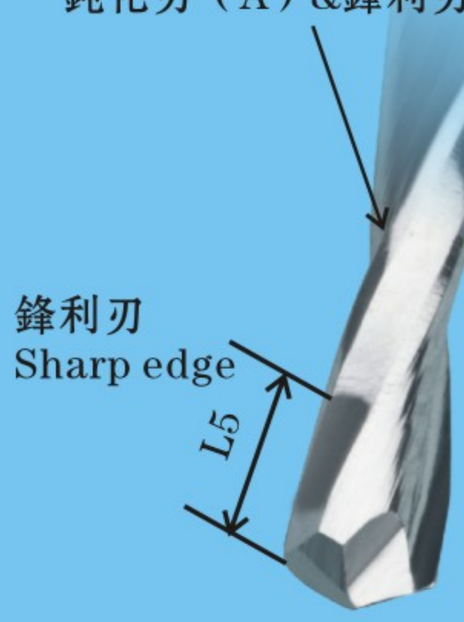

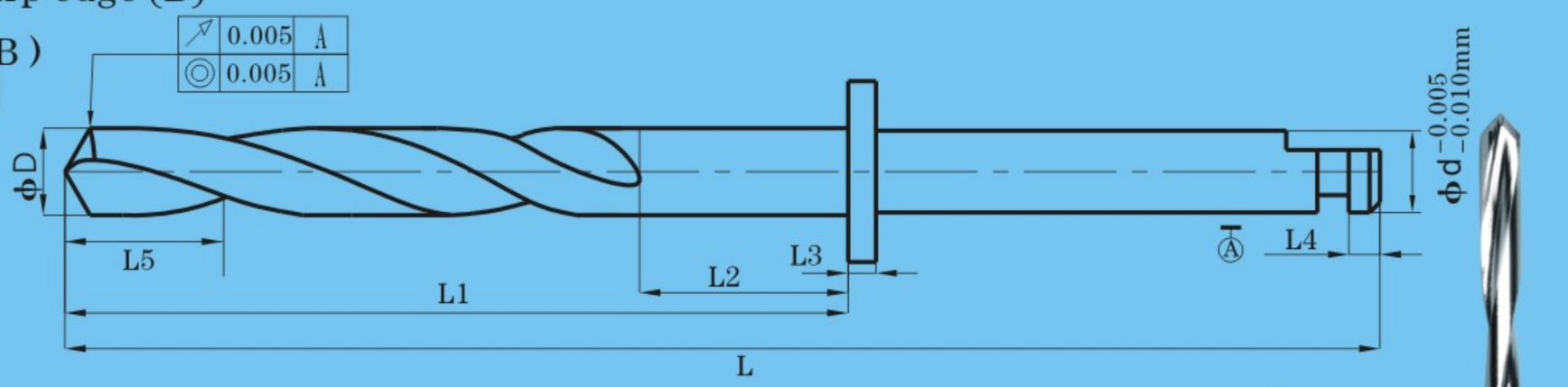



部分尺寸some sizes



刃徑 ΦD Diameter	有效刃長L1 Effective length of cutting edge 刃の長さ	柄徑 Φd Shank Dia.	總長L Overall length 総長さ	刃數Z No.of flute	刃徑 ΦD Diameter	有效刃長L1 Effective length of cutting edge 刃の長さ	柄徑 Φd Shank Dia.	總長L Overall length 総長さ	刃數Z No.of flute
2.0	12	2.35	27.1	2	3.0	25	2.35	34.1	2
2.0	16	2.35	31.1	2	3.0	29	2.35	37.1	2
2.0	19	2.35	34.1	2	3.0	38	2.35	40.1	2
2.0	22	2.35	37.1	2	3.25	29	2.35	44.1	2
2.0	25	2.35	40.1	2	3.85	19	2.35	34.1	2
2.0	29	2.35	44.1	2	3.85	22	2.35	37.1	2
2.0	38	2.35	53.1	2	3.85	25	2.35	40.1	2
2.75	29	2.35	44.1	2	3.85	29	2.35	44.1	2
3.0	19	2.35	34.1	2	4.25	29	2.35	44.1	2
3.0	22	2.35	37.1	2	~	~	~	~	~

※必要可带穿透&不穿透，不同等级加工的中空、空芯内孔加工。
With or without penetration, hollow & hollow core inner hole process with different grades.
必要に応じて、貫通付き&貫通なし、各レベル加工での中空、中空内穴加工。

★可超硬、超精研磨、任意的柄部類型、芯厚、容屑槽寬度、刃背方式、鑽尖方式、内冷却孔方式、刃部結構、刃口角度、刃口鋒利程度之要求，及高可至±0.003mm（3μm）的尺寸公差要求 We can produce with super hard and super finish grinding and satisfy your requirement of any type of shank, web thickness, width of chip flute, land, drill tip,inner cooling hole, structure of cutting edge, angle of cutting edge, degree of sharpness of cutting edge, and the dimension tolerance can be up to ±0.003mm（3μm）

（超高防銹高耐磨（AA）&高精密特殊非標成型）
(unltra-high anti-rust(AA)&high
precision special nonstandard forming)
超防錆高耐磨耗(AA)&高精密特殊非標準成型

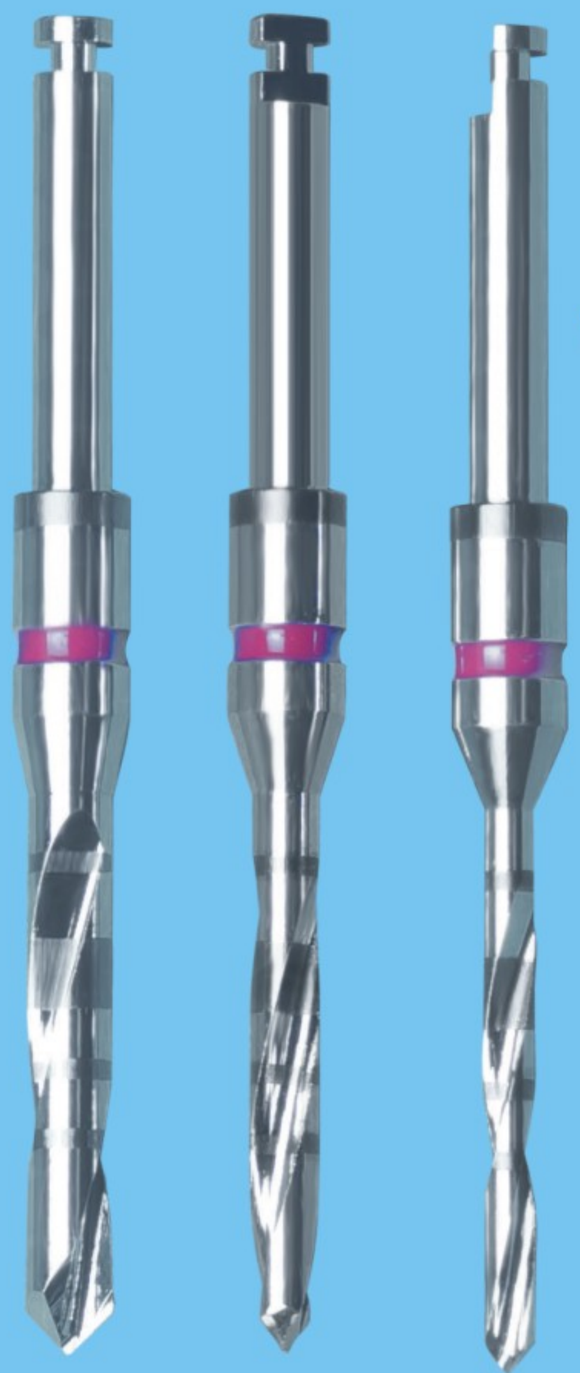

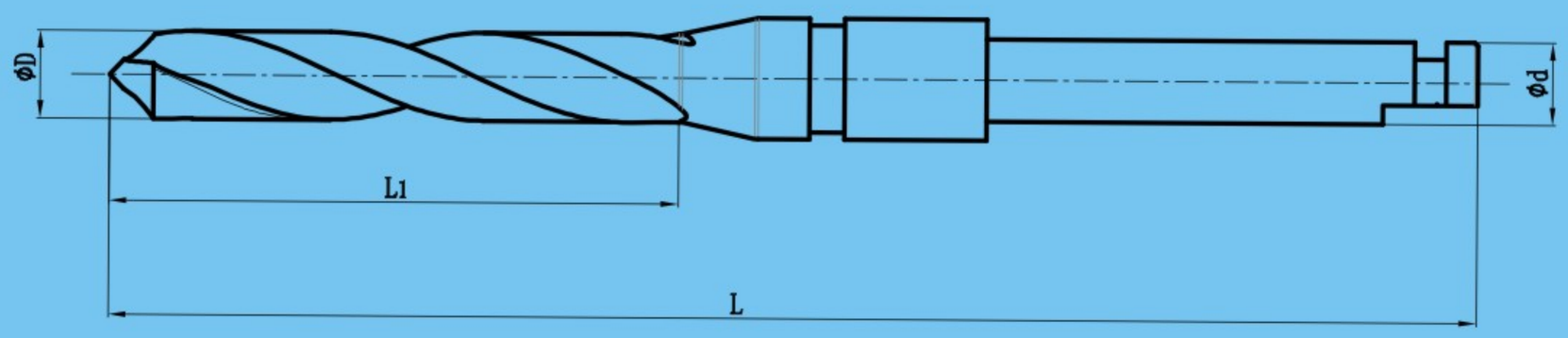

部分尺寸 some size

刃徑ΦD Diameter	1.5	2.0	2.5
刃長L1 Length of cut	16.2	16.2	16.2
柄徑Φd Shank Dia.	2.35	2.35	2.35
總長L Overall length	39	39	39
刃數Z No. of flute	2	2	2

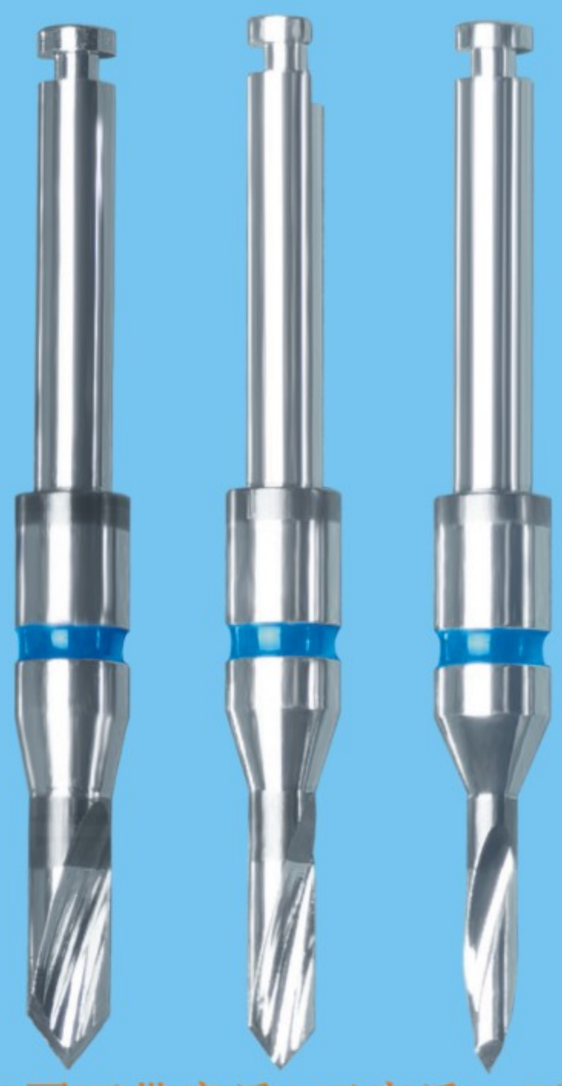

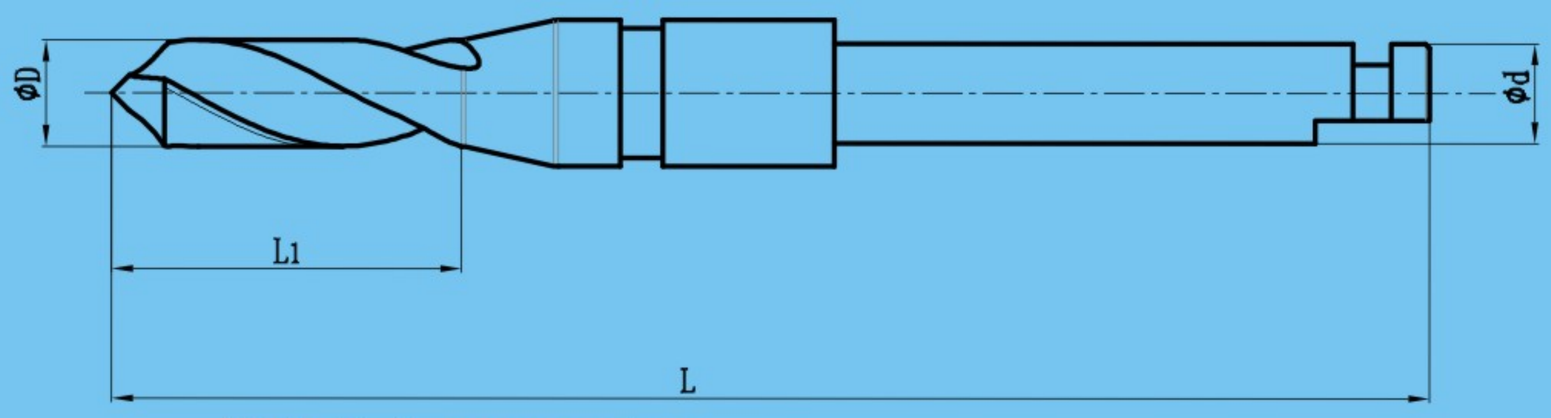

部分尺寸 some size

刃徑ΦD Diameter	1.5	2.0	2.5
刃長L1 Length of cut	8.2	8.2	8.2
柄徑Φd Shank Dia.	2.35	2.35	2.35
總長L Overall length	31	31	31
刃數Z No. of flute	2	2	2

※必要可带穿透&不穿透，不同等级加工的中空、空芯内孔加工。
With or without penetration, hollow & hollow core inner hole process with different grades.
必要に応じて、貫通付き&貫通なし、各レベル加工での中空、中空内穴加工。

醫用工具及配件系列(鑽頭)
Medical tools and parts series(Drill)
医療器具及び部品シリーズ(ドリルヘッド)

（超高防銹高耐磨（AA）&高精密特殊非標成型）
(unltra-high anti-rust(AA)&high precision special nonstandard forming)
超防錆高耐磨耗(AA)&高精密特殊非標準成型

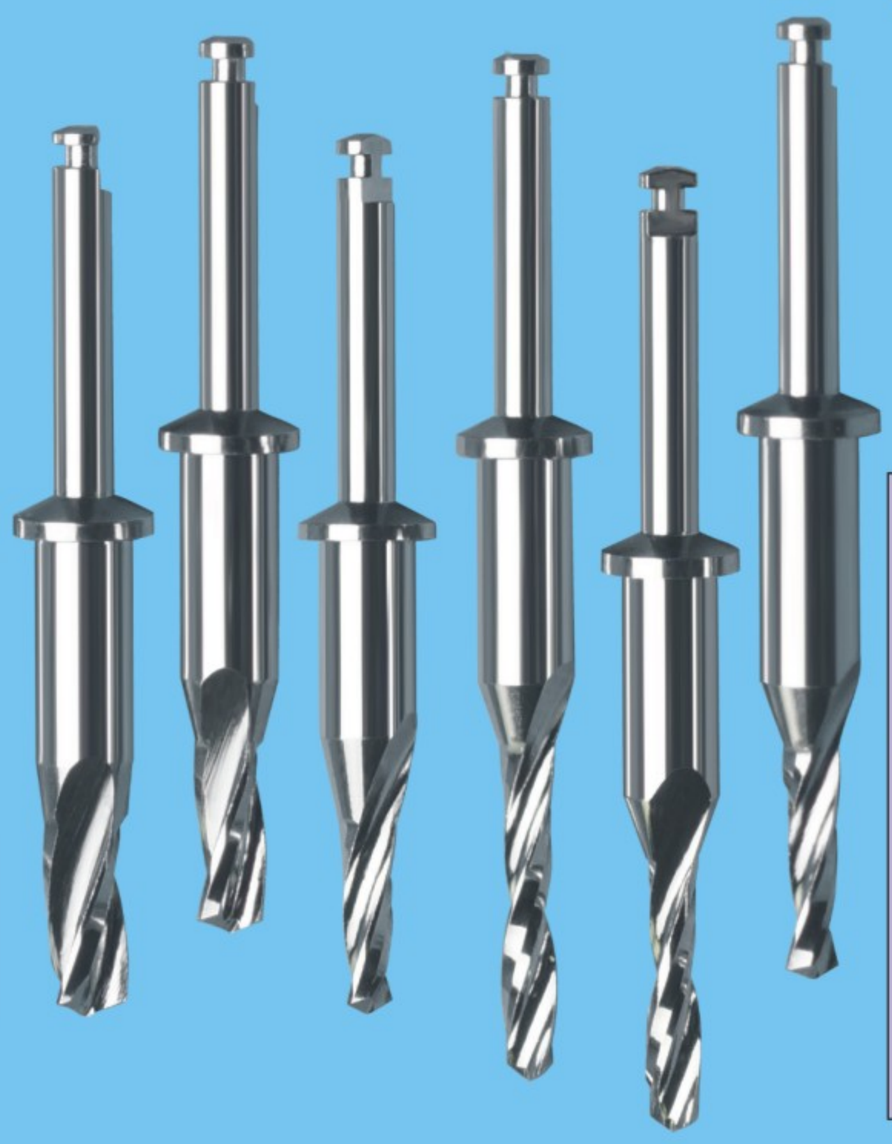

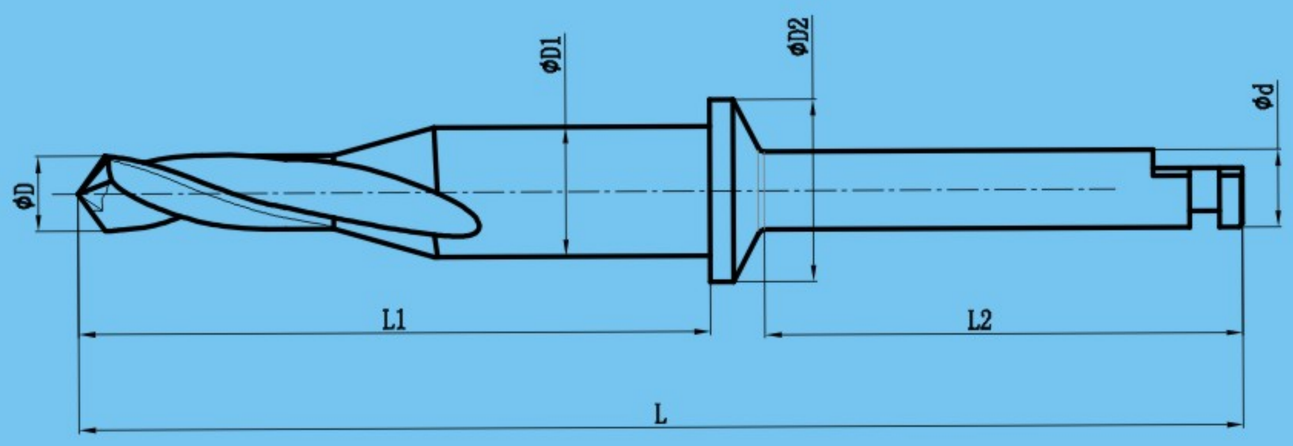

部分尺寸 some size

	刃徑ΦD Diameter	2.20	2.20	2.20	2.30	2.80	3.30
	直徑ΦD1 Diameter	3.90	3.90	3.90	3.90	3.90	3.90
	刃長L1 Length of cut	21.23	23.27	25.26	19.0	19.05	19.05
	柄徑Φd Shank Dia.	2.35	2.35	2.35	2.35	2.35	2.35
	總長L Overall length	37.30	39.36	41.37	35.10	35.23	35.23
	刃數Z No. of flute	2	2	2	2	3	3

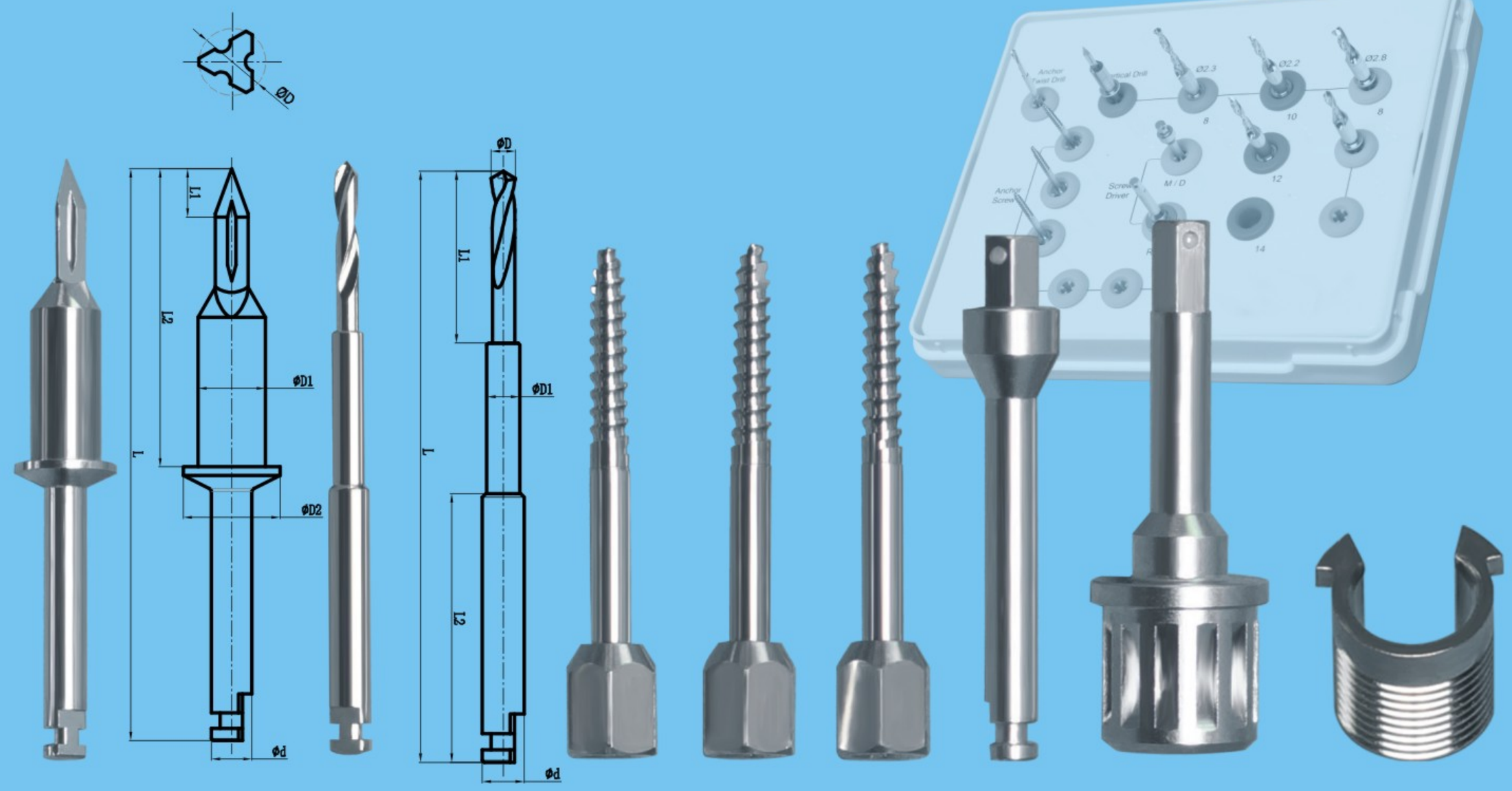

✻必要可带穿透&不穿透，不同等级加工的中空、空芯内孔加工。
With or without penetration, hollow & hollow core inner hole process with different grades.
必要に応じて、貫通付き&貫通なし、各レベル加工での中空、中空内穴加工。

★可超硬、超精研磨.任意的柄部類型.芯厚.容屑槽寬度.刃背方式.鑽尖方式.内冷却孔方式.刃部結構.刃口角度.刃口鋒利程度之要求.及高可至±0.003mm（3μm）的尺寸公差要求 We can produce with super hard and super finish grinding and satisfy your requirement of any type of shank, web thickness, width of chip flute, land, drill tip,inner cooling hole, structure of cutting edge, angle of cutting edge, degree of sharpness of cutting edge, and the dimension tolerance can be up to ±0.003mm（3μm）

LZQ

醫用工具及配件系列(鑽頭)
Medical tools and parts series(Drill)
医療器具及び部品シリーズ(ドリルヘッド)

（超高防銹高耐磨（AA）&高精密特殊非標成型）
(unltra-high anti-rust(AA)&high precision special nonstandard forming)
超防錆高耐磨耗(AA)&高精密特殊非標準成型



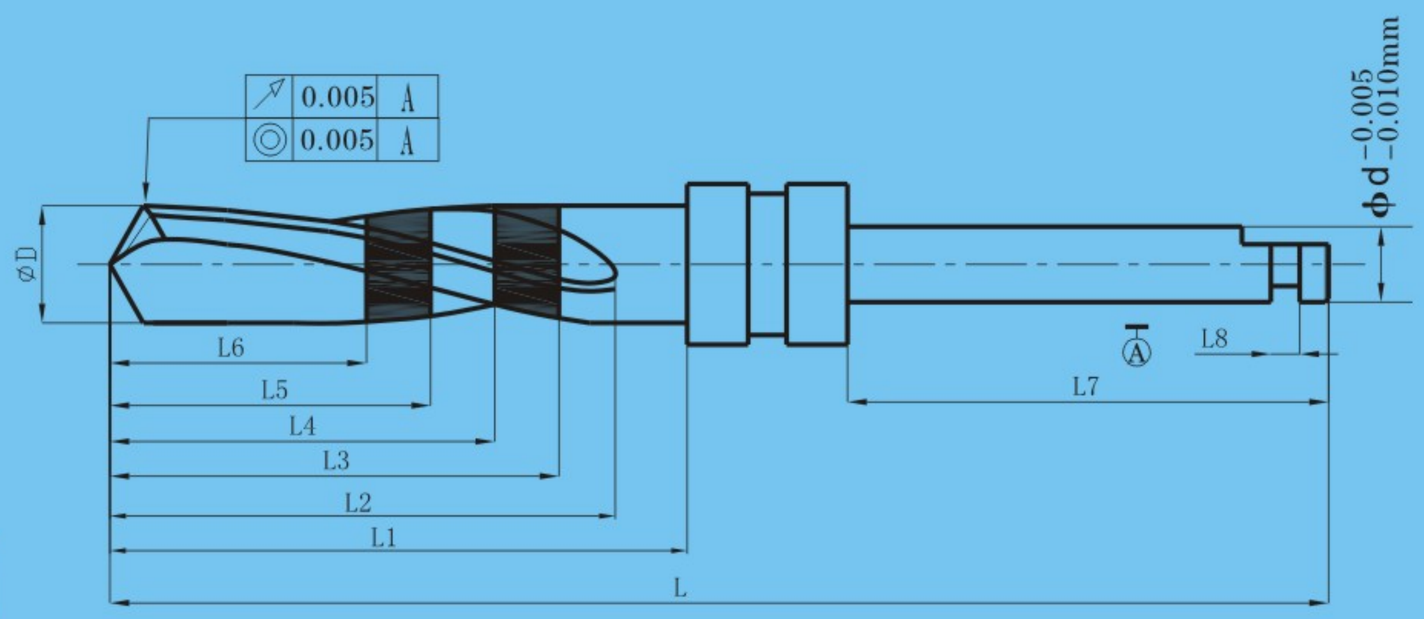

部分尺寸some sizes



刃徑ΦD Diameter	2.5	3.0	3.25	3.5	3.75
有效刃長L1 Effective length of cutting edge 刃の長さ	18	18	18	18	18
柄徑Φd Shank Dia.	2.35	2.35	2.35	2.35	2.35
總長L Overall length 総長さ	38	38	38	38	38
刃數Z No.of flute	2	2	2	2	2



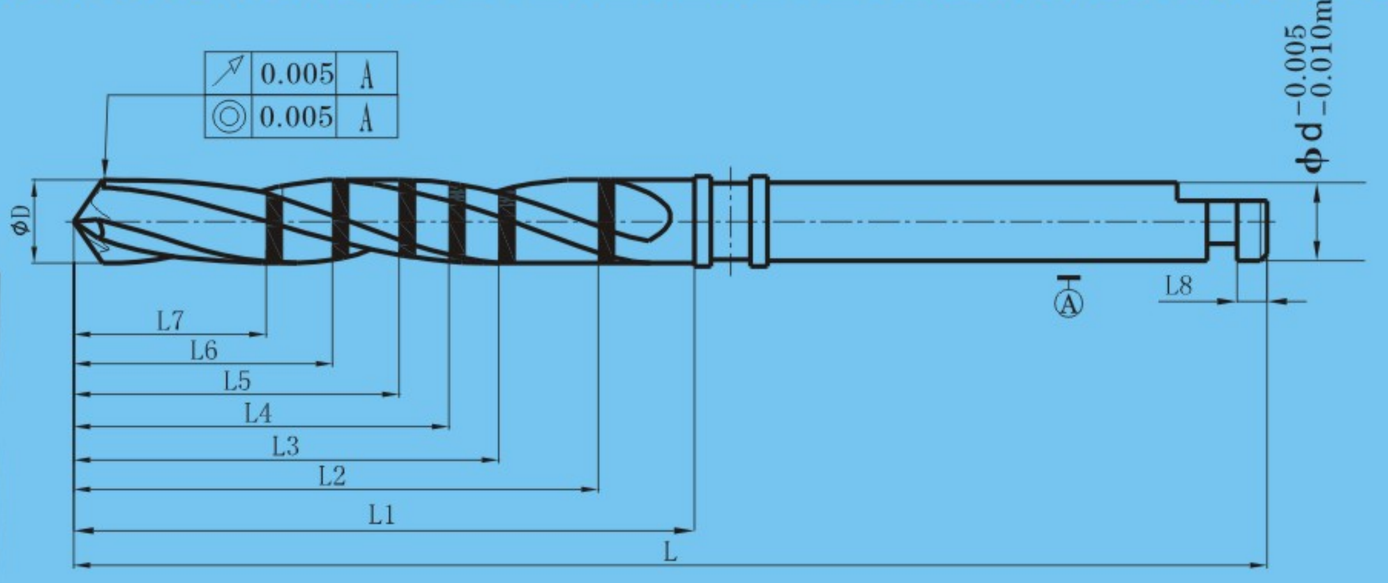

部分尺寸some sizes

刃徑ΦD Diameter	2.2	2.5	2.8	3.0	3.3	3.5	4.0
有效刃長L1 Effective length of cutting edge 刃の長さ	18.7	18.7	18.7	18.7	18.7	18.7	18.7
柄徑Φd Shank Dia.	2.35	2.35	2.35	2.35	2.35	2.35	2.35
總長L Overall length 総長さ	36	36	36	36	36	36	36
刃數Z No.of flute	3	3	3	3	3	3	3

※必要可带穿透&不穿透，不同等级加工的中空、空芯内孔加工。
With or without penetration, hollow & hollow core inner hole process with different grades.
必要に応じて、貫通付き&貫通なし、各レベル加工での中空、中空内穴加工。

★可超硬、超精研磨，任意的柄部類型，芯厚，容屑槽寬度，刃背方式，鑽尖方式，内冷却孔方式，刃部結構，刃口角度，刃口鋒利程度之要求，及高可至±0.003mm（3μm）的尺寸公差要求 We can produce with super hard and super finish grinding and satisfy your requirement of any type of shank, web thickness, width of chip flute, land, drill tip,inner cooling hole, structure of cutting edge, angle of cutting edge, degree of sharpness of cutting edge, and the dimension tolerance can be up to ±0.003mm（3μm）

LZQ

醫用工具及配件系列(鑽頭)
Medical tools and parts series(Drill)
医療器具及び部品シリーズ(ドリルヘッド)

（超高防銹高耐磨（AA）&高精密特殊非標成型）
(unltra-high anti-rust(AA)&high precision special nonstandard forming)
超防錆高耐磨耗(AA)&高精密特殊非標準成型



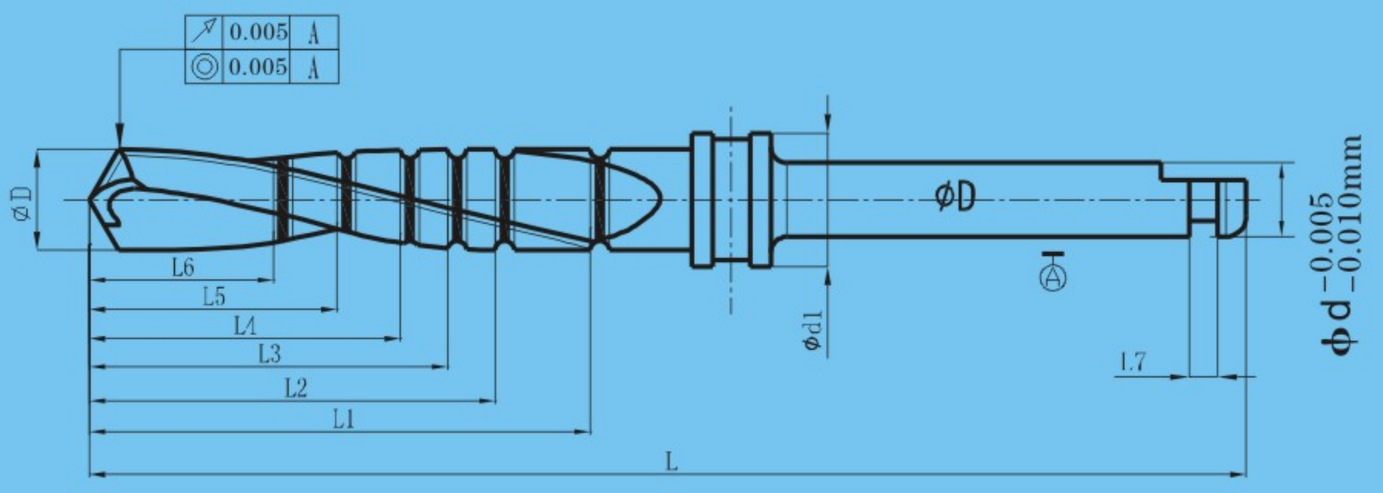

部分尺寸some sizes



刃徑 ΦD Diameter	2.0	2.5	2.8	3.2	3.65	4.0	4.5	4.8	5.2
刃長L1 Length of cut 刃の長さ	18	18	18	18	18	18	18	18	18
柄徑 Φd Shank Dia.	2.35	2.35	2.35	2.35	2.35	2.35	2.35	2.35	2.35
總長L Overall length 總長さ	36.5	36.5	36.5	36.5	36.5	36.5	36.5	36.5	36.5
刃數Z No.of flute	2/3	2/3	2/3	2/3	2/3	2/3	2/3	2/3	2/3

钻头刃长，刃数;色圈及深度标记（刻度），可以根据客户的需要订做。
The length and number of drills' flute, color code and depth mark (scale) can be customized according to customers' requirement.



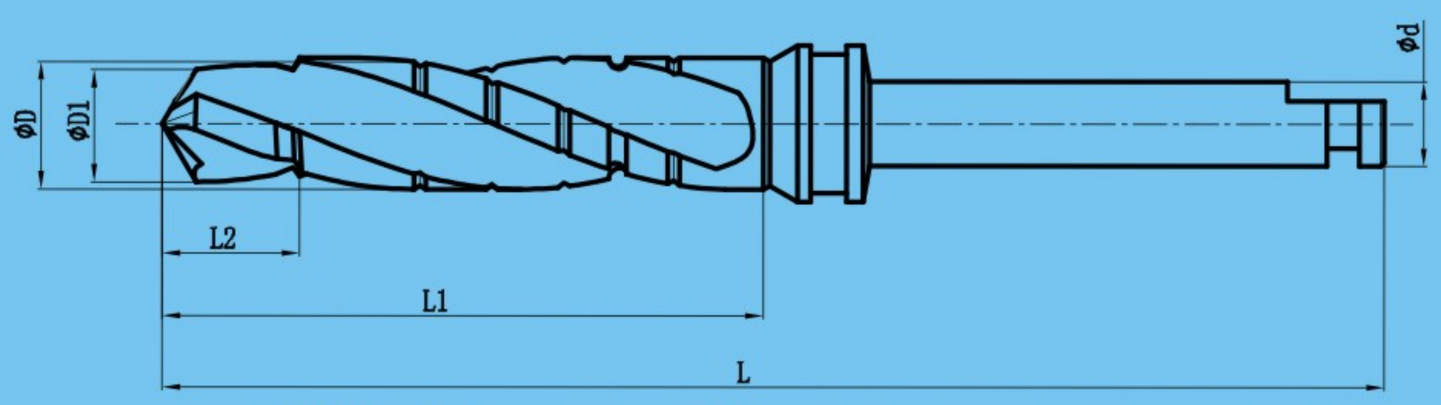

部分尺寸 some size

刃徑ΦD Diameter	2.80	3.20	3.85	4.65
刃徑ΦD1 Diameter	2.40	2.80	3.43	4.0
刃長L1 Length of cut	16.55	16.65	16.80	16.90
柄徑Φd Shank Dia.	2.35	2.35	2.35	2.35
總長L Overall length	33.85	33.95	33.95	34.05
刃數Z No. of flute	2	2	3	3

※必要可带穿透&不穿透，不同等级加工的中空、空芯内孔加工。
With or without penetration, hollow & hollow core inner hole process with different grades.
必要に応じて、貫通付き&貫通なし、各レベル加工での中空、中空内穴加工。

★可超硬、超精研磨.任意的柄部類型.芯厚.容屑槽寬度.刃背方式.鑽尖方式.内冷却孔方式.刃部結構.刃口角度.刃口鋒利程度之要求.及高可至±0.003mm（3μm）的尺寸公差要求 We can produce with super hard and super finish grinding and satisfy your requirement of any type of shank, web thickness, width of chip flute, land, drill tip,inner cooling hole, structure of cutting edge, angle of cutting edge, degree of sharpness of cutting edge, and the dimension tolerance can be up to ±0.003mm（3μm）

LZQ

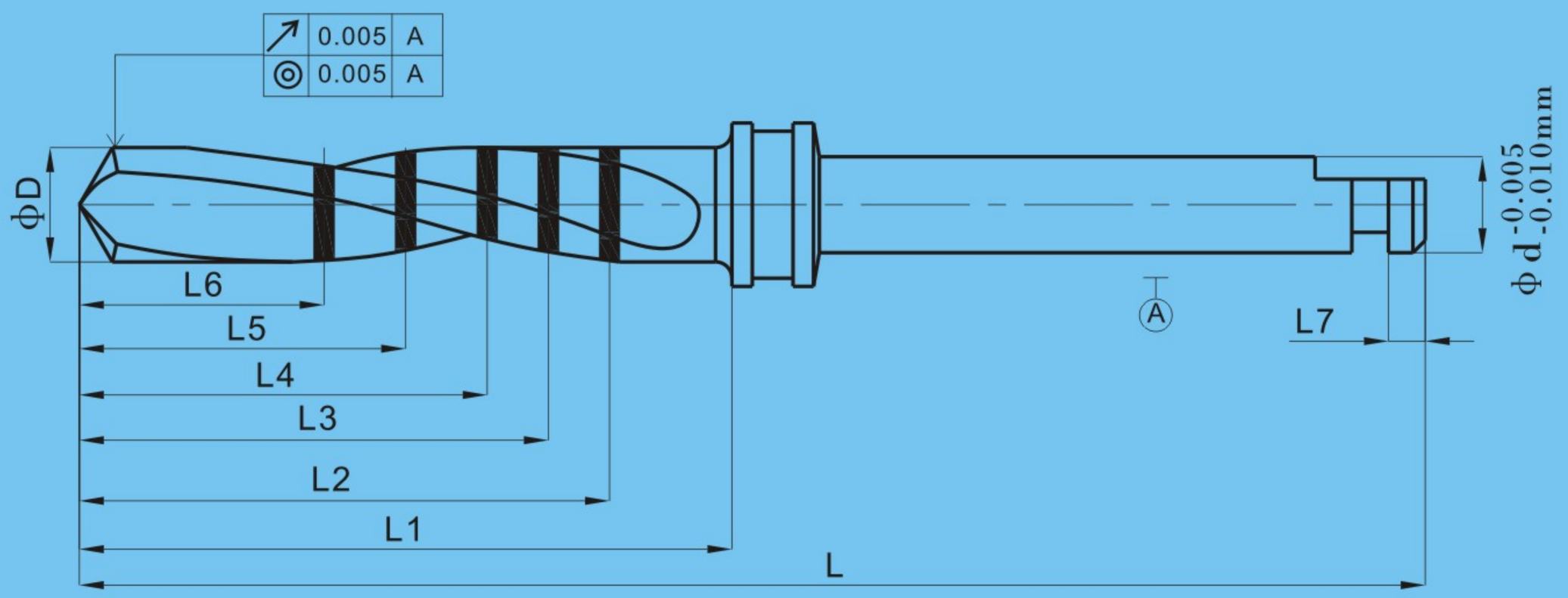



部分尺寸some sizes



刃徑ΦD Diameter	2.0	2.8	3.25	3.65	4.2	2.0	2.8	3.25	3.65	4.2
有效刃長L1 Effective length of cutting edge 刃の長さ	11.5	11.5	11.5	11.5	11.5	16	16	16	16	16
柄徑Φd Shank Dia.	2.35	2.35	2.35	2.35	2.35	2.35	2.35	2.35	2.35	2.35
總長L Overall length 総長さ	28.5	28.5	28.5	28.5	28.5	33	33	33	33	33
刃數Z No.of flute	2	2	2	2	2	2	2	2	2	2

※必要可带穿透&不穿透，不同等级加工的中空、空芯内孔加工。
With or without penetration, hollow & hollow core inner hole process with different grades.
必要に応じて、貫通付き&貫通なし、各レベル加工での中空、中空内穴加工。

★可超硬、超精研磨.任意的柄部類型.芯厚.容屑槽寬度.刃背方式.鑽尖方式.内冷却孔方式.刃部結構.刃口角度.刃口鋒利程度之要求.及高可至±0.003mm（3μm）的尺寸公差要求 We can produce with super hard and super finish grinding and satisfy your requirement of any type of shank, web thickness, width of chip flute, land, drill tip,inner cooling hole, structure of cutting edge, angle of cutting edge, degree of sharpness of cutting edge, and the dimension tolerance can be up to ±0.003mm（3μm）

醫用工具及配件系列(鑽頭)
Medical tools and parts series(Drill)
医療器具及び部品シリーズ(ドリルヘッド)

（超高防銹高耐磨（AA）&高精密特殊非標成型）
(unltra-high anti-rust(AA)&high precision special nonstandard forming)
超防錆高耐磨耗(AA)&高精密特殊非標準成型

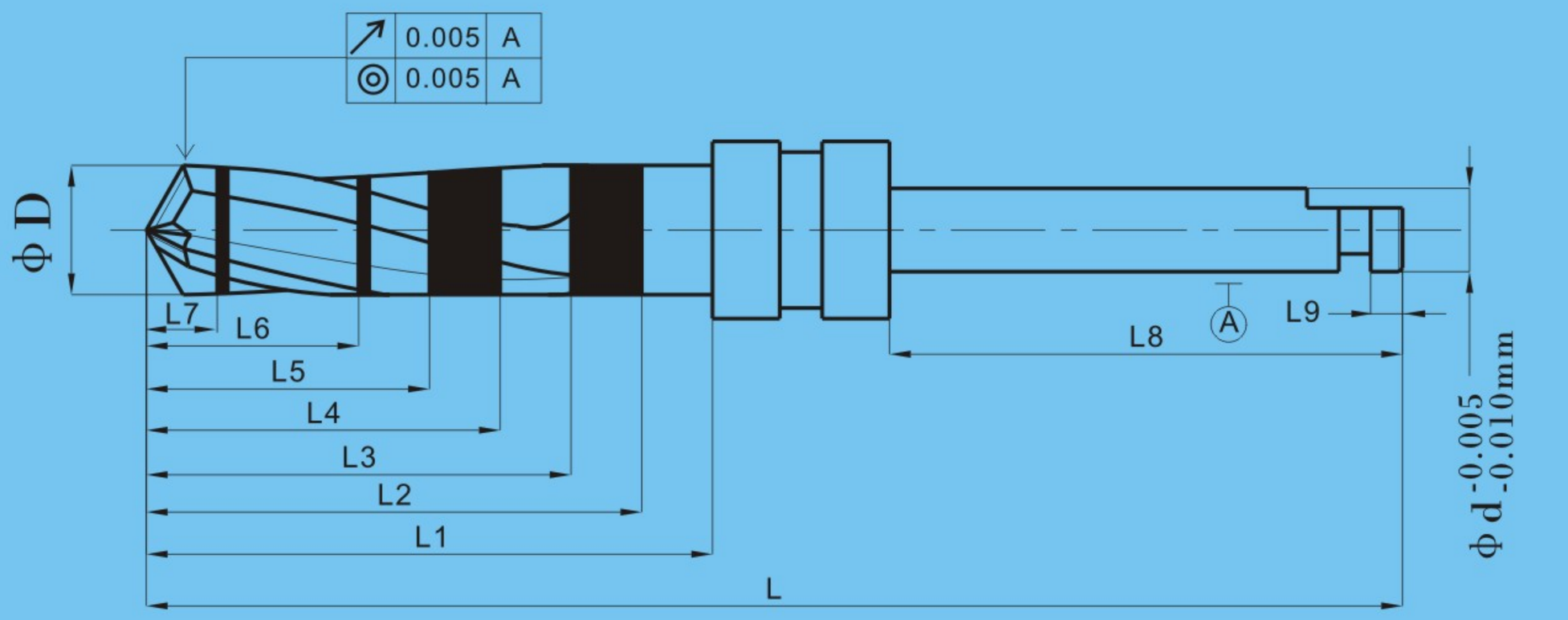

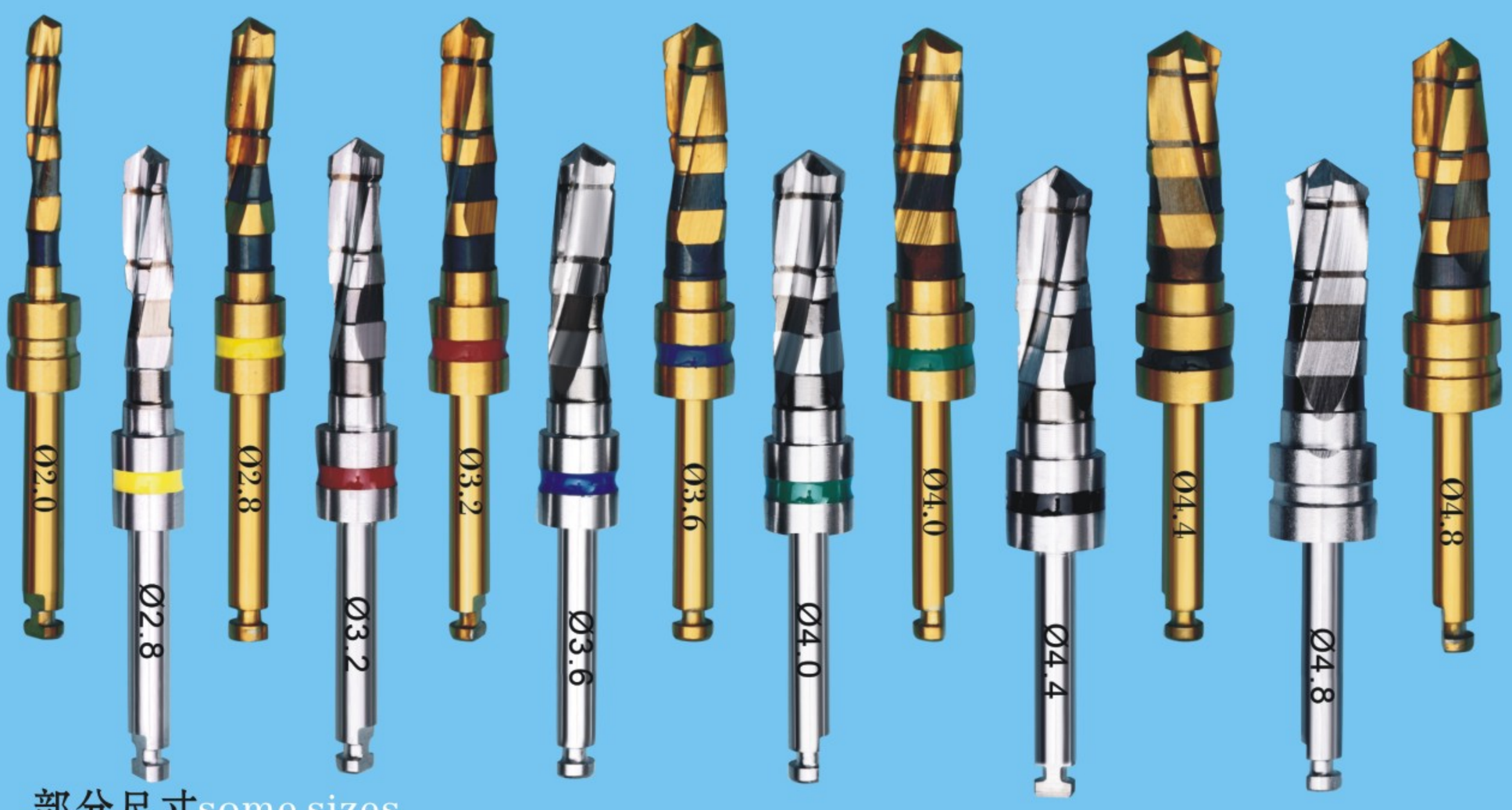

部分尺寸some sizes



	刃徑ϕD Diameter	2.0	2.8	3.2	3.6	4.0	4.4	4.8
	有效刃長L1 Effective length of cutting edge 刃の長さ	16	16	16	16	16	16	16
	柄徑ϕd Shank Dia.	2.35	2.35	2.35	2.35	2.35	2.35	2.35
	總長L Overall length 総長さ	35.5	35.5	35.5	35.5	35.5	35.5	35.5
	刃數Z No.of flute	3	3	3	3	3	3	3

※必要可带穿透&不穿透，不同等级加工的中空、空芯内孔加工。
With or without penetration, hollow & hollow core inner hole process with different grades.
必要に応じて、貫通付き&貫通なし、各レベル加工での中空、中空内穴加工。

★可超硬、超精研磨.任意的柄部類型.芯厚.容屑槽寬度.刃背方式.鑽尖方式.内冷却孔方式.刃部結構.刃口角度.刃口鋒利程度之要求.及高可至±0.003mm（3μm）的尺寸公差要求 We can produce with super hard and super finish grinding and satisfy your requirement of any type of shank, web thickness, width of chip flute, land, drill tip,inner cooling hole, structure of cutting edge, angle of cutting edge, degree of sharpness of cutting edge, and the dimension tolerance can be up to ±0.003mm（3μm）

LZQ

醫用工具及配件系列(鑽頭)
Medical tools and parts series(Drill)
医療器具及び部品シリーズ(ドリルヘッド)

（超高防銹高耐磨（AA）&高精密特殊非標成型）
(unltra-high anti-rust(AA)&high precision special nonstandard forming)
超防錆高耐磨耗(AA)&高精密特殊非標準成型



鑽頭可以依要求生産2刃、3刃或貴司要求（刃數）色圈和深度標記刻度，也可根據具體需要生産。
Drills can be produced with 2 flutes, 3 flutes or any flutes as per your esteemed company's requirement, color code and depth mark scale can also be produced according to specific requirement.



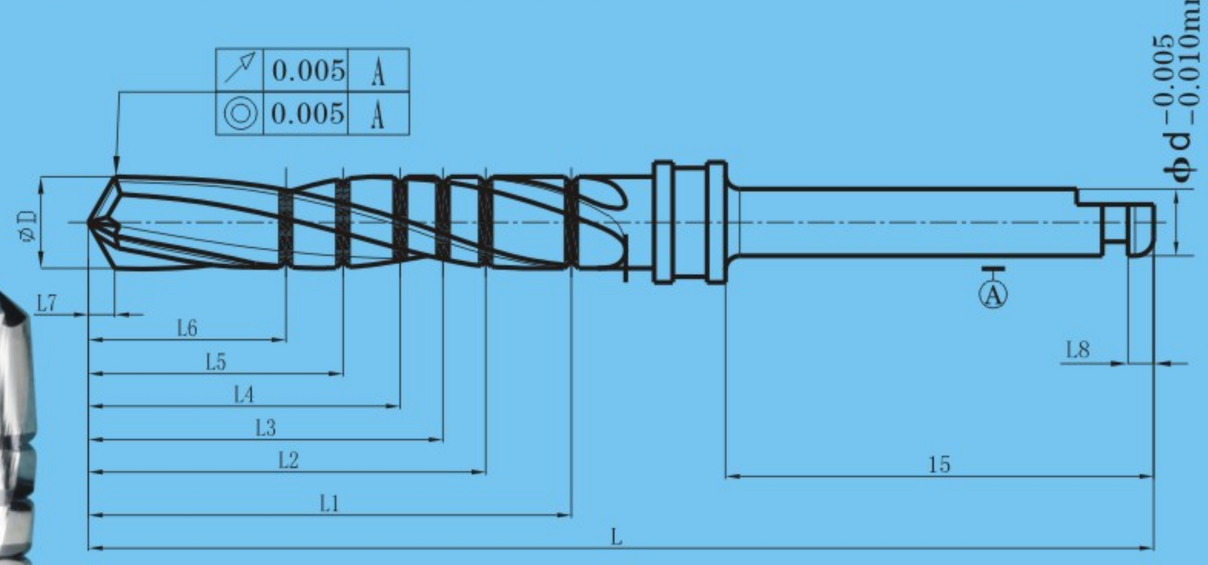

部分尺寸some sizes



刃徑ΦD Diameter	2.0	2.8	3.2	3.65	4.2	4.8	5.2
有效刃長L1 Effective length of cutting edge 刃の長さ	16	16	16	16	16	16	16
柄徑Φd Shank Dia.	2.35	2.35	2.35	2.35	2.35	2.35	2.35
總長L Overall length 総長さ	36.5	36.5	36.5	36.5	36.5	36.5	36.5
刃數Z No.of flute	2	2	2	2/3	2/3	2/3	2/3

※必要可带穿透&不穿透，不同等级加工的中空、空芯内孔加工。
With or without penetration, hollow & hollow core inner hole process with different grades.
必要に応じて、貫通付き&貫通なし、各レベル加工での中空、中空内穴加工。

★可超硬、超精研磨、任意的柄部類型、芯厚、容屑槽寬度、刃背方式、鑽尖方式、内冷却孔方式、刃部結構、刃口角度、刃口鋒利程度之要求、及高可至±0.003mm（3μm）的尺寸公差要求 We can produce with super hard and super finish grinding and satisfy your requirement of any type of shank, web thickness, width of chip flute, land, drill tip,inner cooling hole, structure of cutting edge, angle of cutting edge, degree of sharpness of cutting edge, and the dimension tolerance can be up to ±0.003mm（3μm）

（超高防銹高耐磨（AA）&高精密特殊非標成型）
(unltra-high anti-rust(AA)&high precision special nonstandard forming)
超防錆高耐磨耗(AA)&高精密特殊非標準成型

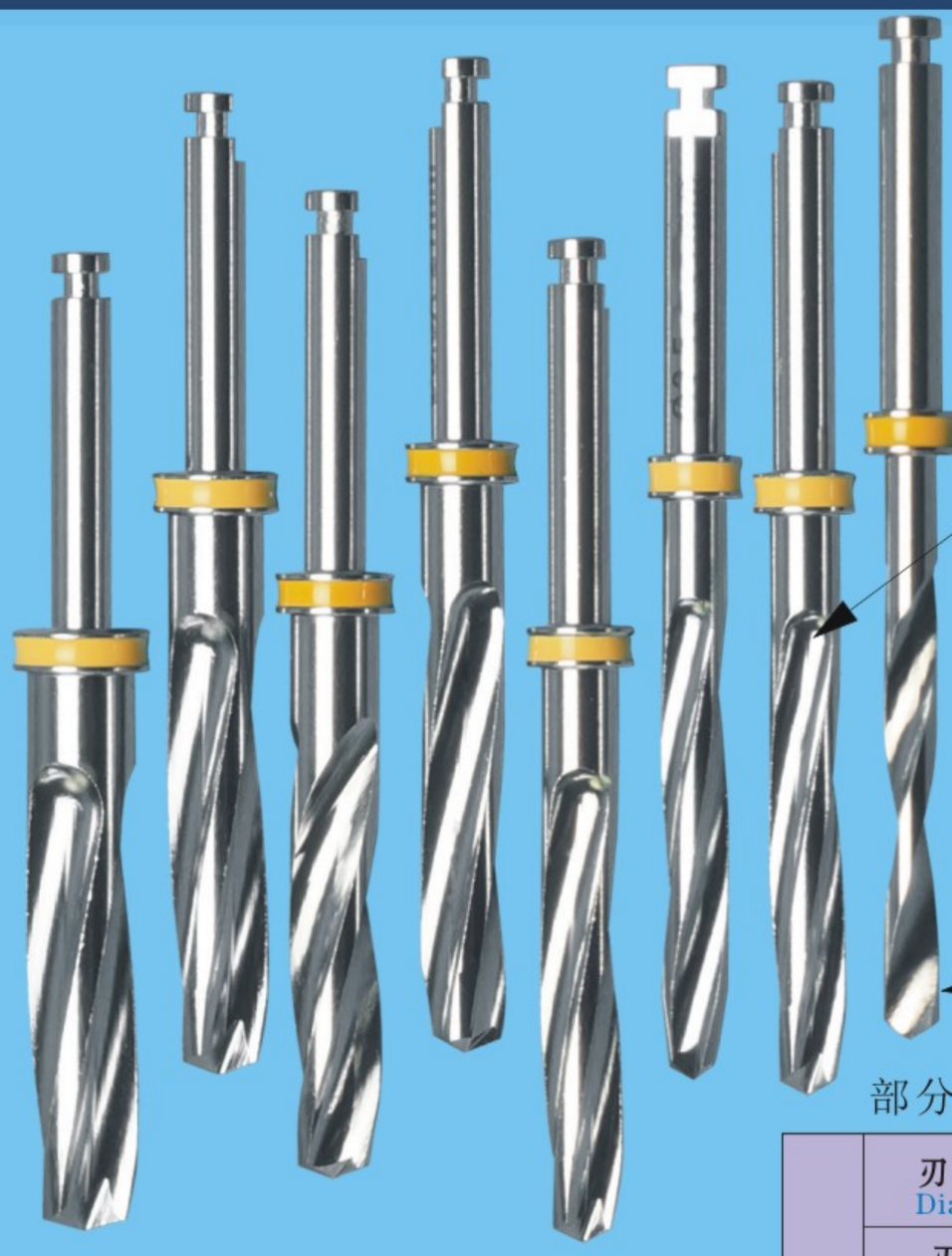

深槽至頂、可堆屑至槽頂。（可黑色、黄色、全亞光、全亮光、部分亞光+部分亮光等表面處理）

Deep groove to top, chip accumulation to the crest. (It can be with black, yellow, full matt, full shiny, partial matt + partial shiny and other surface treatment)

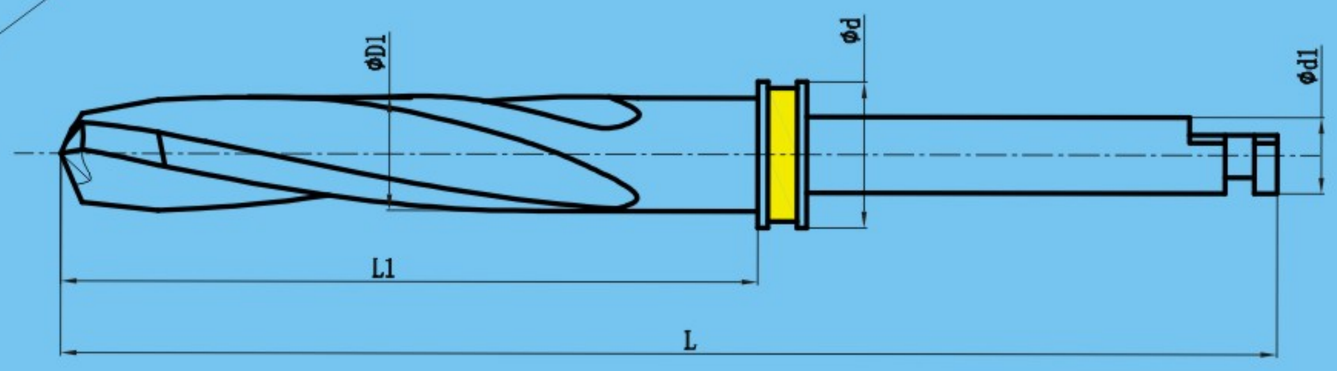

可爲2刃/3刃/4刃的螺旋刃
It can be 2-flute/3-flute /4-flute helical edge

部分尺寸 some size

刃徑ΦD Diameter	2.0	2.5	2.8	3.0	3.30	3.50	3.80	4.30
刃長L1 Length of cut	21.5	21.5	21.5	21.5	21.5	21.5	21.5	21.5
柄徑Φd Shank Dia.	2.35	2.35	2.35	2.35	2.35	2.35	2.35	2.35
總長L Overall length	37.5	37.5	37.5	37.5	37.5	37.5	37.5	37.5
刃數Z No. of flute	2	3	3	3	3	3	3	3



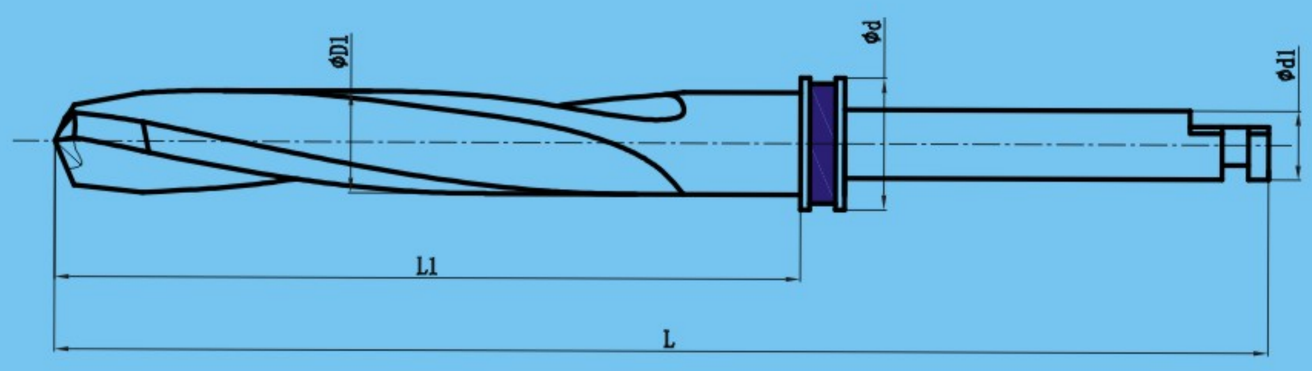

部分尺寸 some size

刃徑ΦD Diameter	2.5	2.8	3.0	3.30	3.50	3.80	4.30
刃長L1 Length of cut	25.5	25.5	25.5	25.5	25.5	25.5	25.5
柄徑Φd Shank Dia.	2.35	2.35	2.35	2.35	2.35	2.35	2.35
總長L Overall length	41.5	41.5	41.5	41.5	41.5	41.5	41.5
刃數Z No. of flute	3	3	3	3	3	3	3

※必要可带穿透&不穿透，不同等级加工的中空、空芯内孔加工。
With or without penetration, hollow & hollow core inner hole process with different grades.
必要に応じて、貫通付き&貫通なし、各レベル加工での中空、中空内穴加工。

★可超硬、超精研磨，任意的柄部類型、芯厚、容屑槽寬度、刃背方式、鑽尖方式、内冷却孔方式、刃部結構、刃口角度、刃口鋒利程度之要求，及高可至±0.003mm（3μm）的尺寸公差要求 We can produce with super hard and super finish grinding and satisfy your requirement of any type of shank, web thickness, width of chip flute, land, drill tip,inner cooling hole, structure of cutting edge, angle of cutting edge, degree of sharpness of cutting edge, and the dimension tolerance can be up to ±0.003mm（3μm）

醫用工具及配件系列(引導鑽頭/引導成型鑽)
Medical tools and parts series(Guided drill/Guided profile drill)
医療器具及び部品シリーズ（ガイドドリルヘッド/ガイド成型ドリル)

（超高防銹高耐磨（AA）&高精密特殊非標成型）
(unltra-high anti-rust(AA)&high precision special nonstandard forming)
超防錆高耐磨耗(AA)&高精密特殊非標準成型



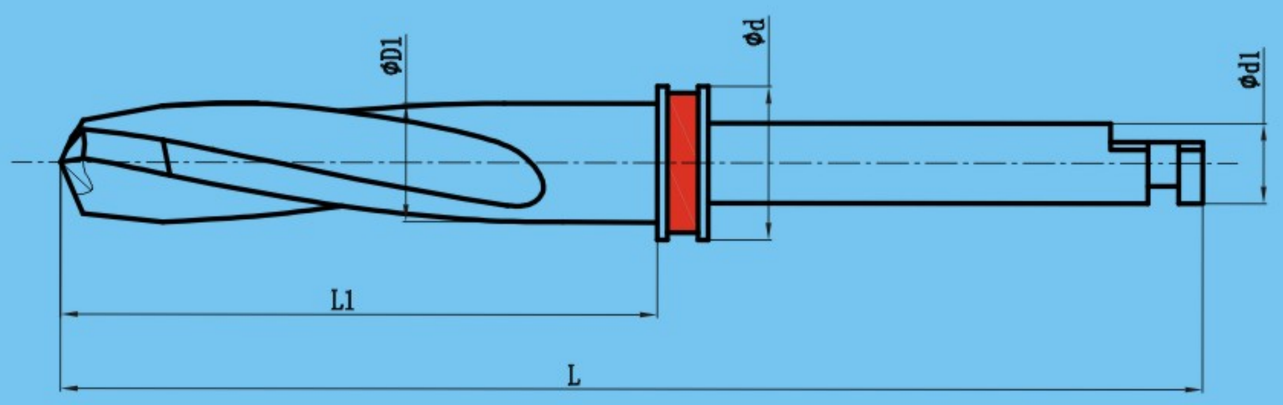

深槽至頂、可堆屑至槽頂。（可黑色、黄色、全亞光、全亮光、部分亞光+部分亮光等表面處理）

Deep groove to top, chip accumulation to the crest. (It can be with black, yellow, full matt, full shiny, partial matt + partial shiny and other surface treatment)

可爲2刃/3刃/4刃的螺旋刃
It can be 2-flute/3-flute /4-flute helical edge

部分尺寸 some size

刃徑ΦD Diameter	2.0	2.5	2.8	3.0	3.30	3.50	3.80	4.30
刃長L1 Length of cut	17.5	17.5	17.5	17.5	17.5	17.5	17.5	17.5
柄徑Φd Shank Dia.	2.35	2.35	2.35	2.35	2.35	2.35	2.35	2.35
總長L Overall length	33.5	33.5	33.5	33.5	33.5	33.5	33.5	33.5
刃數Z No. of flute	2	3	3	3	3	3	3	3



※必要可带穿透&不穿透，不同等级加工的中空、空芯内孔加工。
With or without penetration, hollow & hollow core inner hole process with different grades.
必要に応じて、貫通付き&貫通なし、各レベル加工での中空、中空内穴加工。

★可超硬、超精研磨.任意的柄部類型.芯厚.容屑槽寬度.刃背方式.鑽尖方式.内冷却孔方式.刃部結構.刃口角度.刃口鋒利程度之要求.及高可至±0.003mm（3μm）的尺寸公差要求 We can produce with super hard and super finish grinding and satisfy your requirement of any type of shank, web thickness, width of chip flute, land, drill tip,inner cooling hole, structure of cutting edge, angle of cutting edge, degree of sharpness of cutting edge, and the dimension tolerance can be up to ±0.003mm（3μm）

醫用工具及配件系列(引導鑽頭/引導成型鑽)
Medical tools and parts series(Guided drill/Guided profile drill)
医療器具及び部品シリーズ（ガイドドリルヘッド/ガイド成型ドリル)

（超高防銹高耐磨（AA）&高精密特殊非標成型）
(unltra-high anti-rust(AA)&high precision special nonstandard forming)
超防錆高耐磨耗(AA)&高精密特殊非標準成型

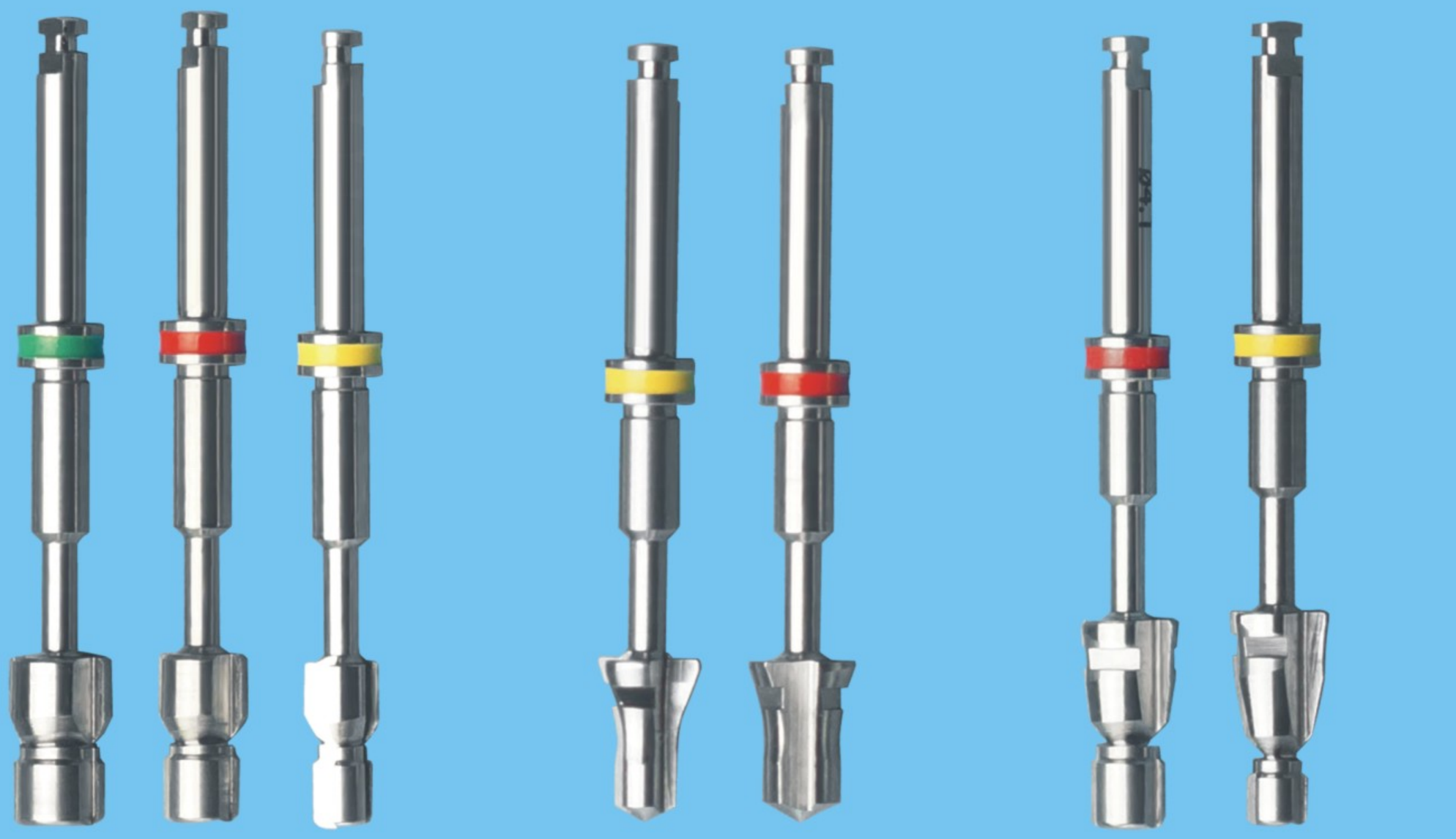



＊必要可带穿透&不穿透，不同等级加工的中空、空芯内孔加工。
With or without penetration, hollow & hollow core inner hole process with different grades.
必要に応じて、貫通付き&貫通なし、各レベル加工での中空、中空内穴加工。

★可超硬、超精研磨.任意的柄部類型.芯厚.容屑槽寬度.刃背方式.鑽尖方式.内冷却孔方式.刃部結構.刃口角度.刃口鋒利程度之要求.及高可至±0.003mm（3μm）的尺寸公差要求 We can produce with super hard and super finish grinding and satisfy your requirement of any type of shank, web thickness, width of chip flute, land, drill tip,inner cooling hole, structure of cutting edge, angle of cutting edge, degree of sharpness of cutting edge, and the dimension tolerance can be up to ±0.003mm（3μm）

LZQ

醫用工具及配件系列(成型鑽/肩臺成型鑽)
Medical tools and parts series(Profile drill/Shoulder countersink)
医療器具及び部品シリーズ（成型ドリル/ショルダー成型ドリル)

（超高防銹高耐磨（AA）&高精密特殊非標成型）
(unltra-high anti-rust(AA)&high precision special nonstandard forming)
超防錆高耐磨耗(AA)&高精密特殊非標準成型

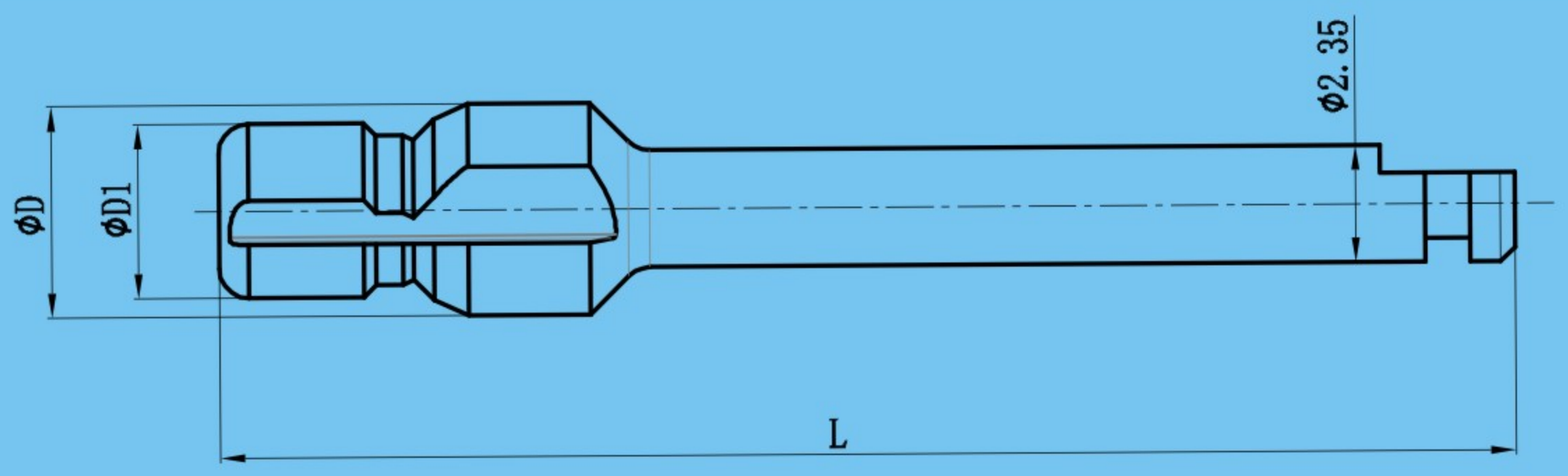

部分尺寸 some size

刃徑ΦD Diameter	3.5	3.5	4.2	4.2	4.8	4.8
刃長L1 Length of cut	2.8	2.8	3.5	3.5	4.2	4.2
柄徑Φd Shank Dia.	2.35	2.35	2.35	2.35	2.35	2.35
總長L Overall length	26	35	26	35	26	35
刃數Z No. of flute	3	3	3	3	3	3

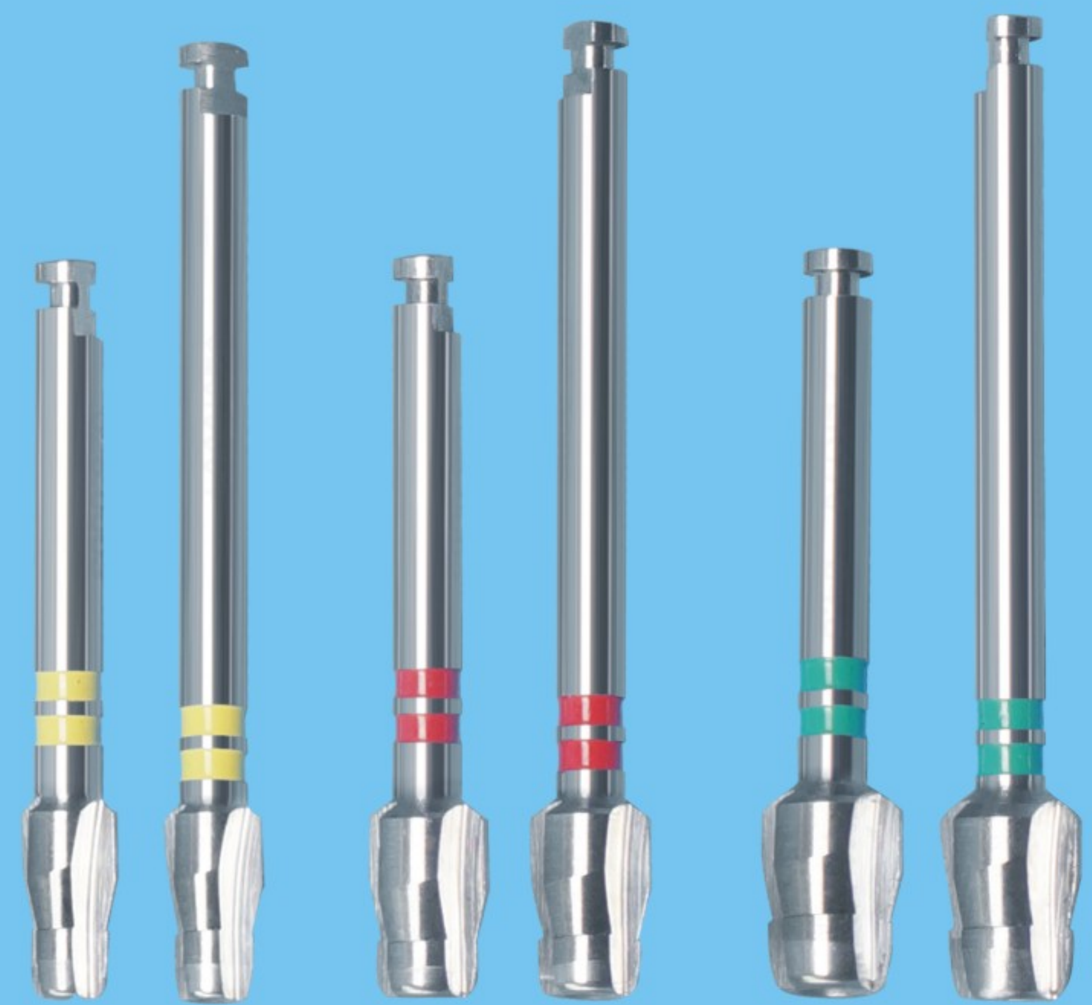



※必要可带穿透&不穿透，不同等级加工的中空、空芯内孔加工。
With or without penetration, hollow & hollow core inner hole process with different grades.
必要に応じて、貫通付き&貫通なし、各レベル加工での中空、中空内穴加工。

★可超硬、超精研磨.任意的柄部類型.芯厚.容屑槽寬度.刃背方式.鑽尖方式.内冷却孔方式.刃部結構.刃口角度.刃口鋒利程度之要求.及高可至±0.003mm（3μm）的尺寸公差要求 We can produce with super hard and super finish grinding and satisfy your requirement of any type of shank, web thickness, width of chip flute, land, drill tip,inner cooling hole, structure of cutting edge, angle of cutting edge, degree of sharpness of cutting edge, and the dimension tolerance can be up to ±0.003mm（3μm）

醫用工具及配件系列(成型鑽/肩臺成型鑽)
Medical tools and parts series(Profile drill/Shoulder countersink)
医療器具及び部品シリーズ（成型ドリル/ショルダー成型ドリル)

（超高防銹高耐磨（AA）&高精密特殊非標成型）
(unltra-high anti-rust(AA)&high precision special nonstandard forming)
超防錆高耐磨耗(AA)&高精密特殊非標準成型



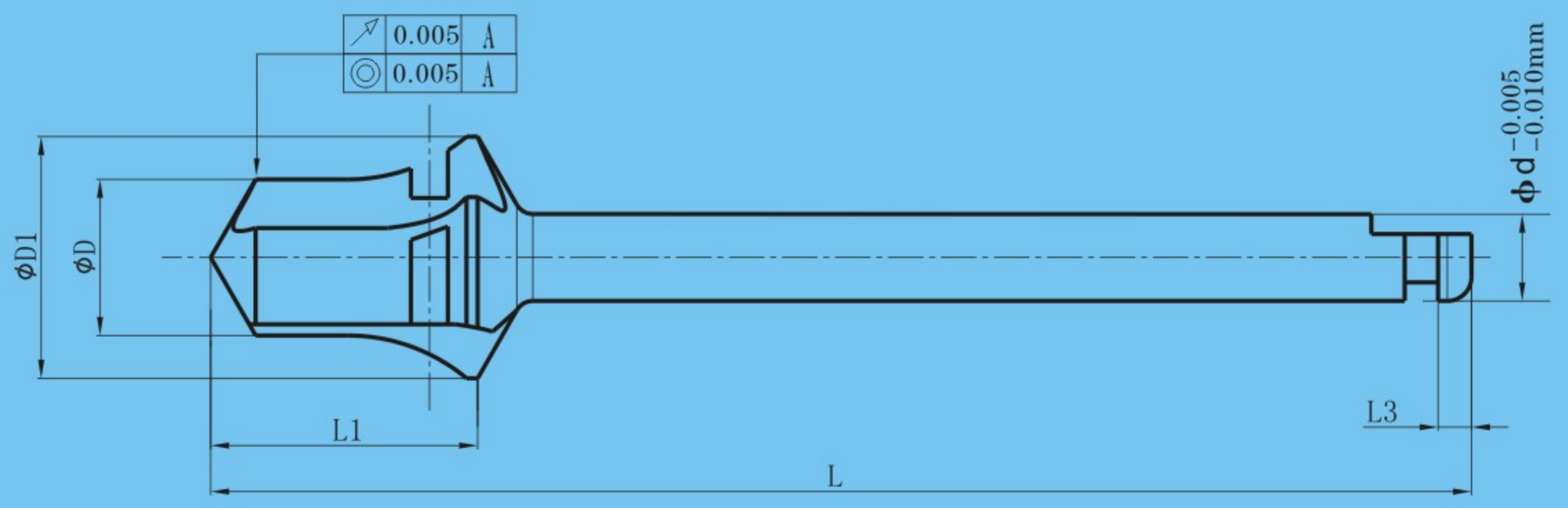

部分尺寸some sizes

	刃徑ΦD Diameter	2.8	2.8	3.5	3.5	4.2	4.2
	刃徑ΦD1 Diameter	4.8	4.8	4.8	4.8	6.53	6.5
	刃長L1 Length of cut 刃の長さ	6.65	7.2	6.72	7.2	7.2	7.2
	柄徑Φd Shank Dia.	2.35	2.35	2.35	2.35	2.35	2.35
	總長L Overall length 総長さ	33.85	34	34.3	34	25	34

帶刃&不帶刃導柱
Guide pillar with or without flute

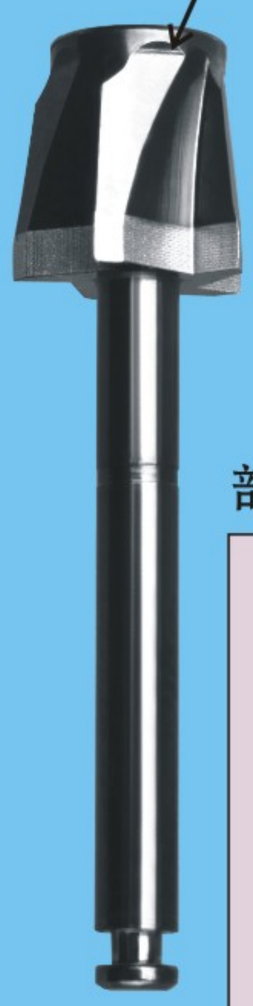

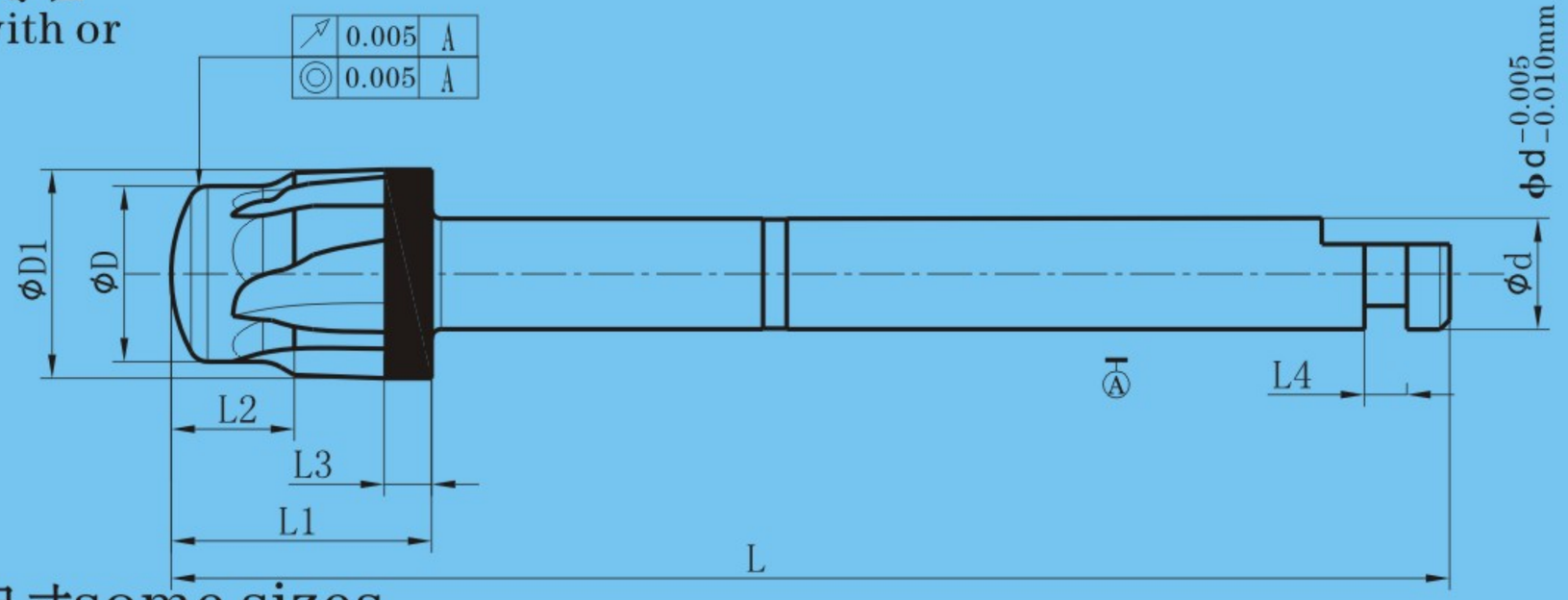

部分尺寸some sizes

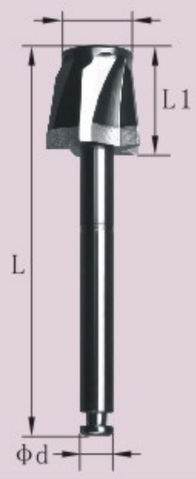	刃徑ΦD1 Diameter	3.6	4.0	4.5	5.0	6.0	7.0
	刃長L1 Length of cut 刃の長さ	5.5	5.5	5.5	5.5	7.5	7.2
	柄徑Φd Shank Dia.	2.35	2.35	2.35	2.35	2.35	2.35
	總長L Overall length 総長さ	28	28	28	28	27	27

※必要可带穿透&不穿透，不同等级加工的中空、空芯内孔加工。
With or without penetration, hollow & hollow core inner hole process with different grades.
必要に応じて、貫通付き&貫通なし、各レベル加工での中空、中空内穴加工。

★可超硬、超精研磨. 任意的柄部類型. 芯厚. 容屑槽寬度. 刃背方式. 鑽尖方式. 内冷却孔方式. 刃部結構. 刃口角度. 刃口鋒利程度之要求. 及高可至±0.003mm（3μm）的尺寸公差要求 We can produce with super hard and super finish grinding and satisfy your requirement of any type of shank, web thickness, width of chip flute, land, drill tip,inner cooling hole, structure of cutting edge, angle of cutting edge, degree of sharpness of cutting edge, and the dimension tolerance can be up to ±0.003mm（3μm）



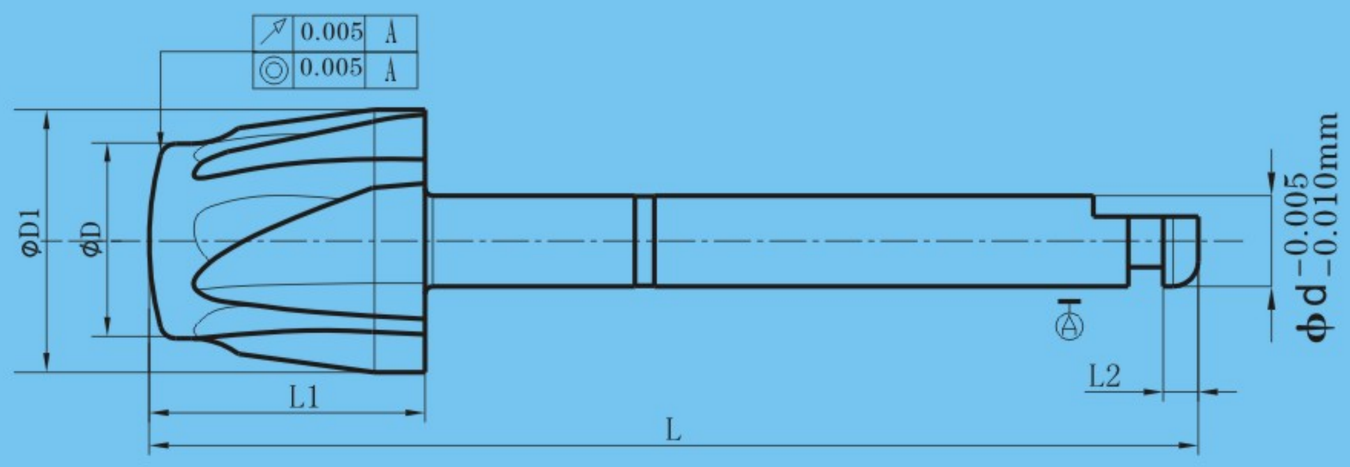

★、可以任意CAD/3D/實物結構方式的倒角加工。
Chamfering process for any structural style of CAD/3D/entity



部分尺寸some sizes



刃徑φD Diameter	2.7	3.1	3.7	3.9	4.2	5.0
刃徑φD1 Diameter	3.6	4.0	4.5	5.0	6.0	7.0
刃長L1 Length of cut 刃の長さ	5.5	5.5	5.5	5.5	7.5	7.2
柄徑φd Shank Dia.	2.35	2.35	2.35	2.35	2.35	2.35
總長L Overall length 総長さ	28	28	28	28	27	27
刃數Z No.of flute	5	5	5	5	5	5



※必要可带穿透&不穿透，不同等级加工的中空、空芯内孔加工。
With or without penetration, hollow & hollow core inner hole process with different grades.
必要に応じて、貫通付き&貫通なし、各レベル加工での中空、中空内穴加工。

★可超硬、超精研磨，任意的柄部類型、芯厚、容屑槽寬度、刃背方式、鑽尖方式、内冷却孔方式、刃部結構、刃口角度、刃口鋒利程度之要求，及高可至±0.003mm（3μm）的尺寸公差要求 We can produce with super hard and super finish grinding and satisfy your requirement of any type of shank, web thickness, width of chip flute, land, drill tip,inner cooling hole, structure of cutting edge, angle of cutting edge, degree of sharpness of cutting edge, and the dimension tolerance can be up to ±0.003mm（3μm）

醫用工具及配件系列(成型鑽/肩臺成型鑽)
Medical tools and parts series(Profile drill/Shoulder countersink)
医療器具及び部品シリーズ（成型ドリル/ショルダー成型ドリル)

（超高防銹高耐磨（AA）&高精密特殊非標成型）
(unltra-high anti-rust(AA)&high precision special nonstandard forming)
超防錆高耐磨耗(AA)&高精密特殊非標準成型

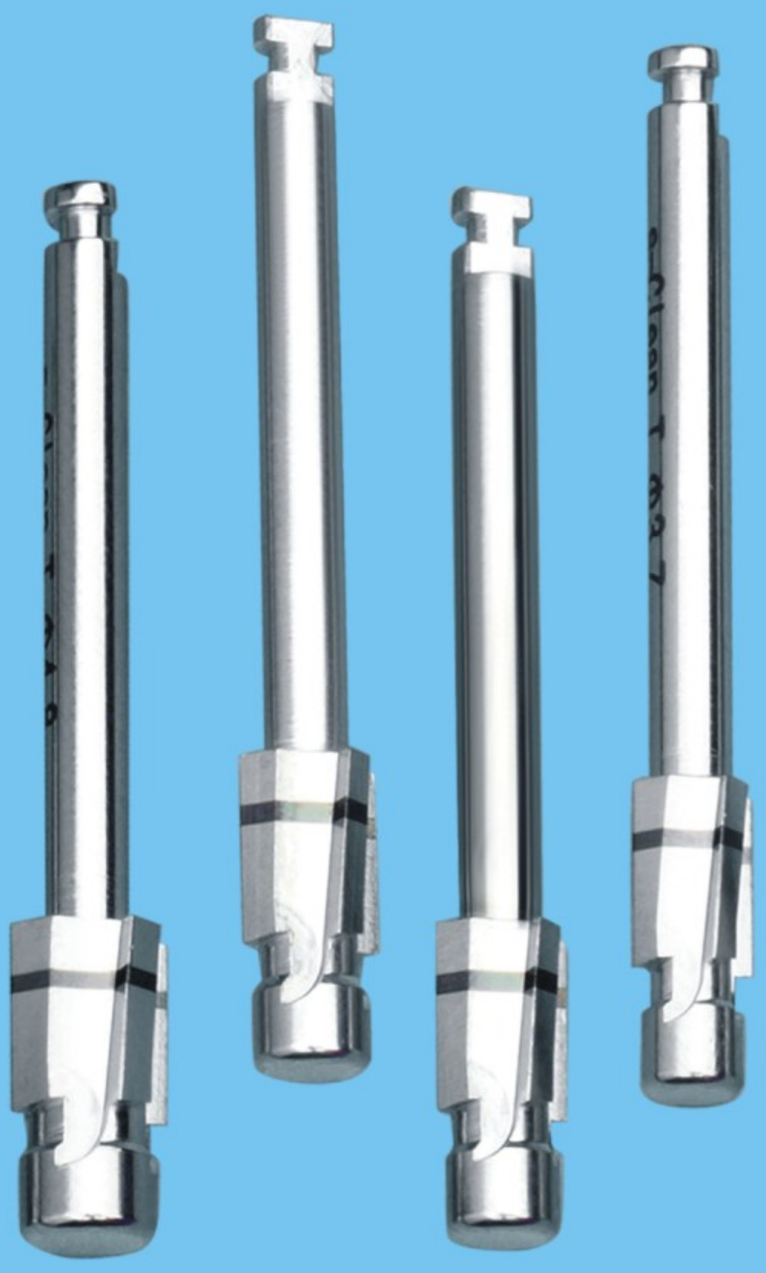

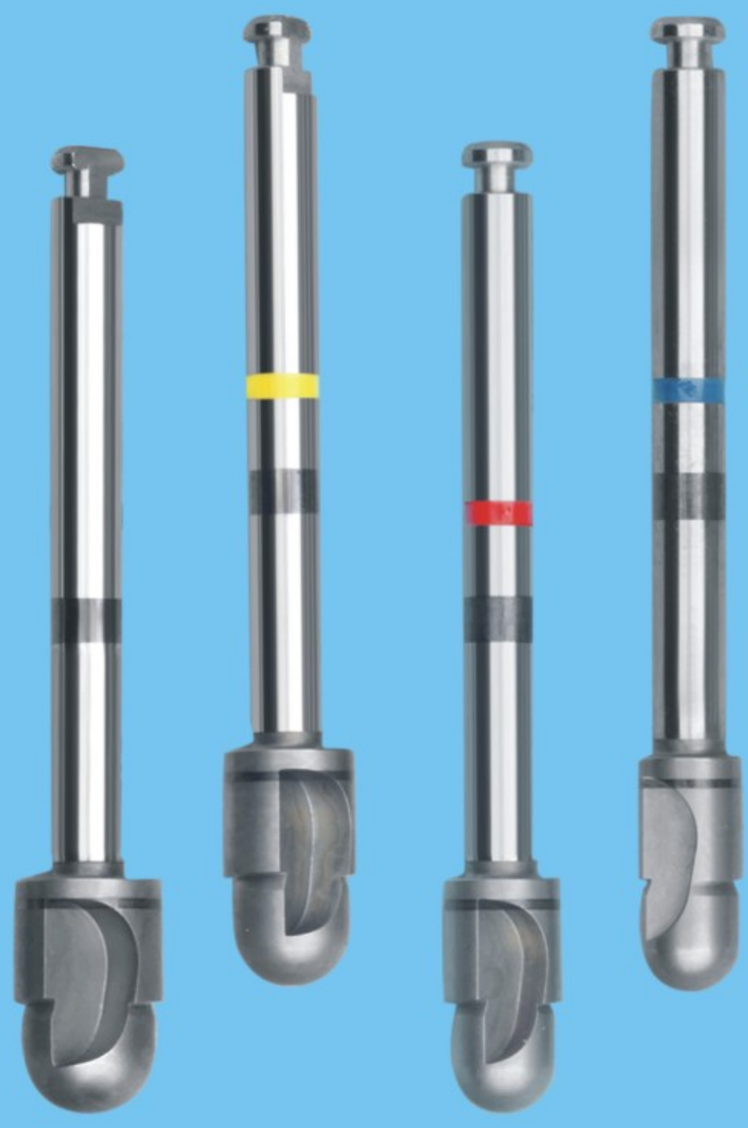

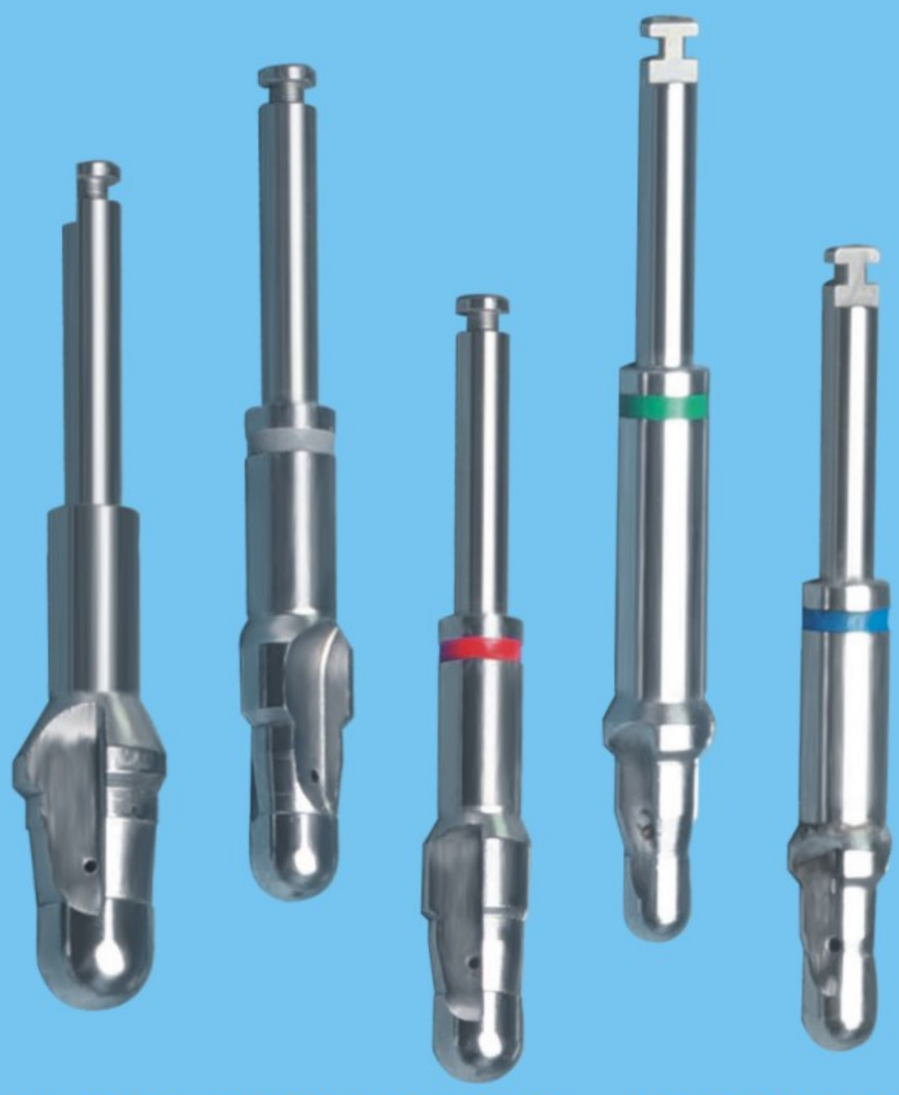

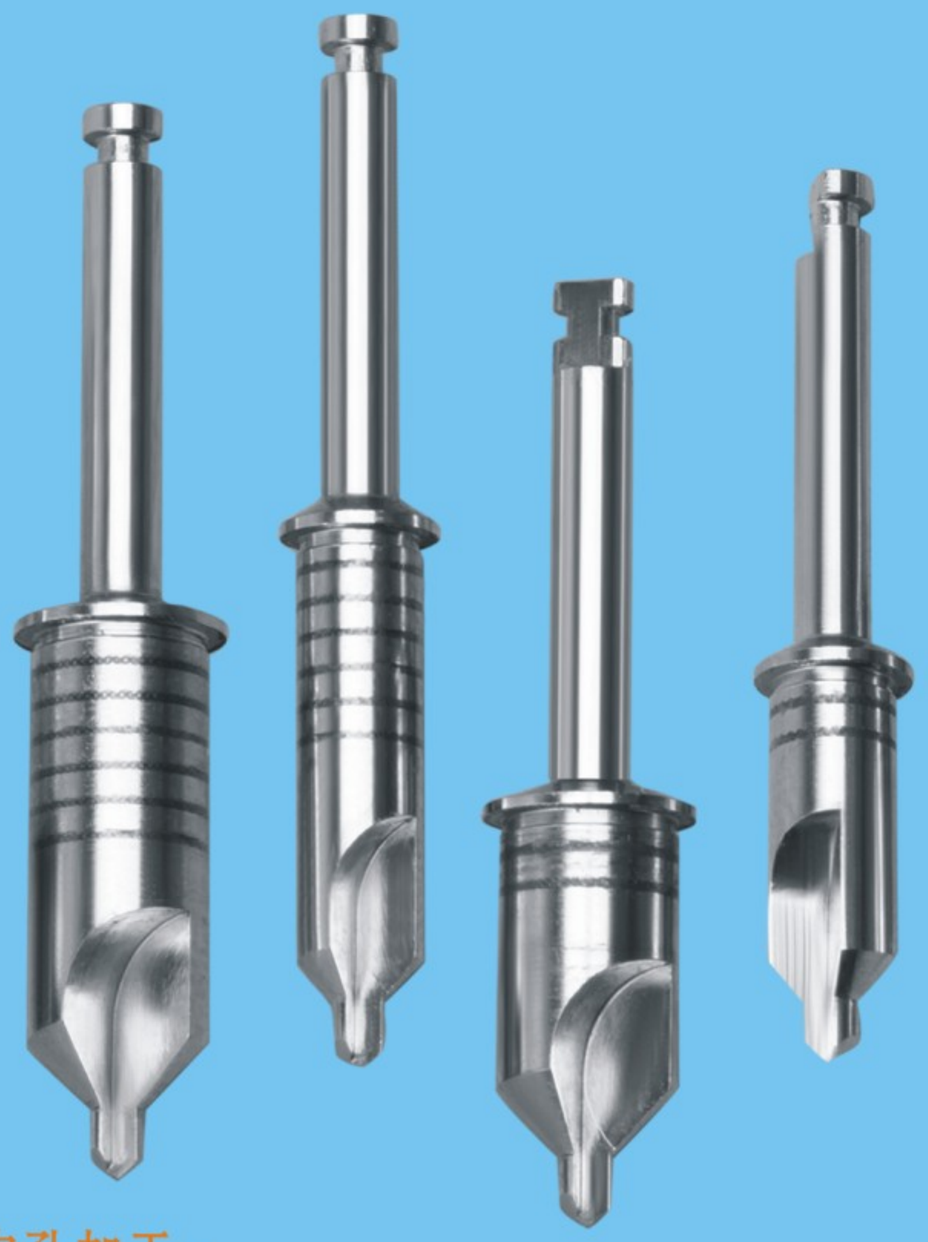

※必要可带穿透&不穿透，不同等级加工的中空、空芯内孔加工。
With or without penetration, hollow & hollow core inner hole process with different grades.
必要に応じて、貫通付き&貫通なし、各レベル加工での中空、中空内穴加工。

★可超硬、超精研磨.任意的柄部類型.芯厚.容屑槽寬度.刃背方式.鑽尖方式.内冷却孔方式.刃部結構.刃口角度.刃口鋒利程度之要求.及高可至±0.003mm（3μm）的尺寸公差要求 We can produce with super hard and super finish grinding and satisfy your requirement of any type of shank, web thickness, width of chip flute, land, drill tip,inner cooling hole, structure of cutting edge, angle of cutting edge, degree of sharpness of cutting edge, and the dimension tolerance can be up to ±0.003mm（3μm）

LZQ

醫用工具及配件系列(鑽頭)
Medical tools and parts series(Drill)
医療器具及び部品シリーズ(ドリルヘッド)

（超高防銹高耐磨（AA）&高精密特殊非標成型）
(unltra-high anti-rust(AA)&high precision special nonstandard forming)
超防錆高耐磨耗(AA)&高精密特殊非標準成型

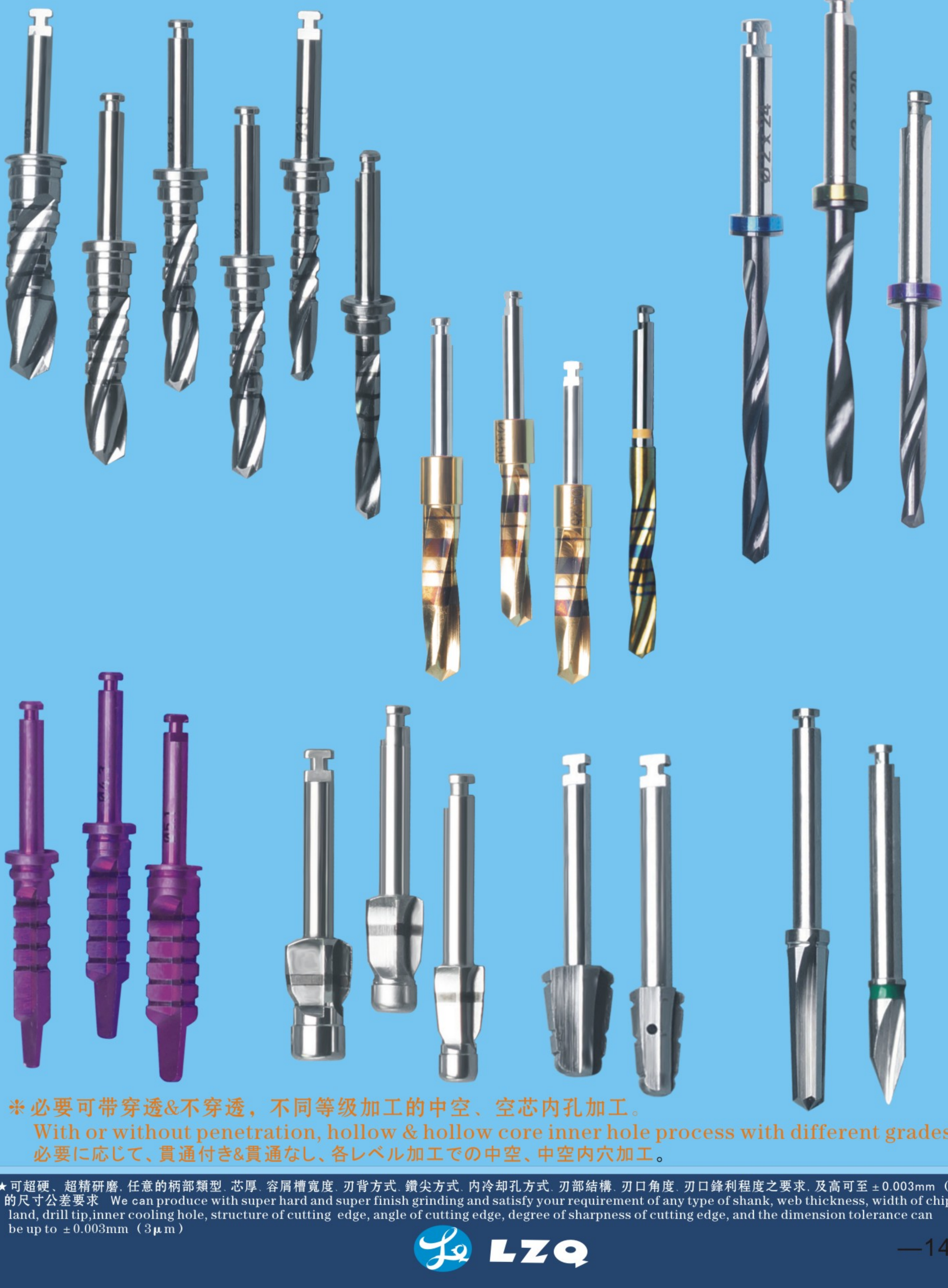

※必要可带穿透&不穿透，不同等级加工的中空、空芯内孔加工。
With or without penetration, hollow & hollow core inner hole process with different grades.
必要に応じて、貫通付き&貫通なし、各レベル加工での中空、中空内穴加工。

★可超硬、超精研磨.任意的柄部類型.芯厚.容屑槽寬度.刃背方式.鑽尖方式.内冷却孔方式.刃部結構.刃口角度.刃口鋒利程度之要求.及高可至±0.003mm（3μm）的尺寸公差要求 We can produce with super hard and super finish grinding and satisfy your requirement of any type of shank, web thickness, width of chip flute, land, drill tip,inner cooling hole, structure of cutting edge, angle of cutting edge, degree of sharpness of cutting edge, and the dimension tolerance can be up to ±0.003mm（3μm）

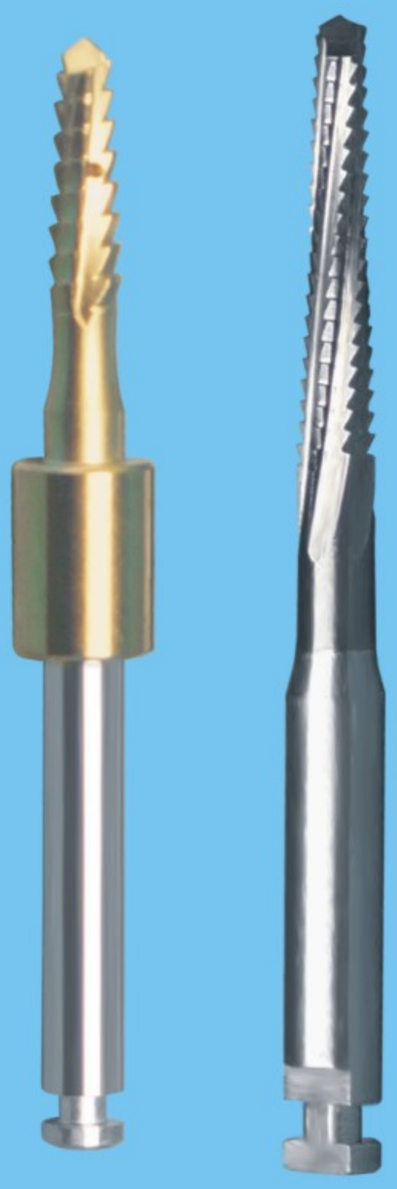

修正、校正
Amendment, correction

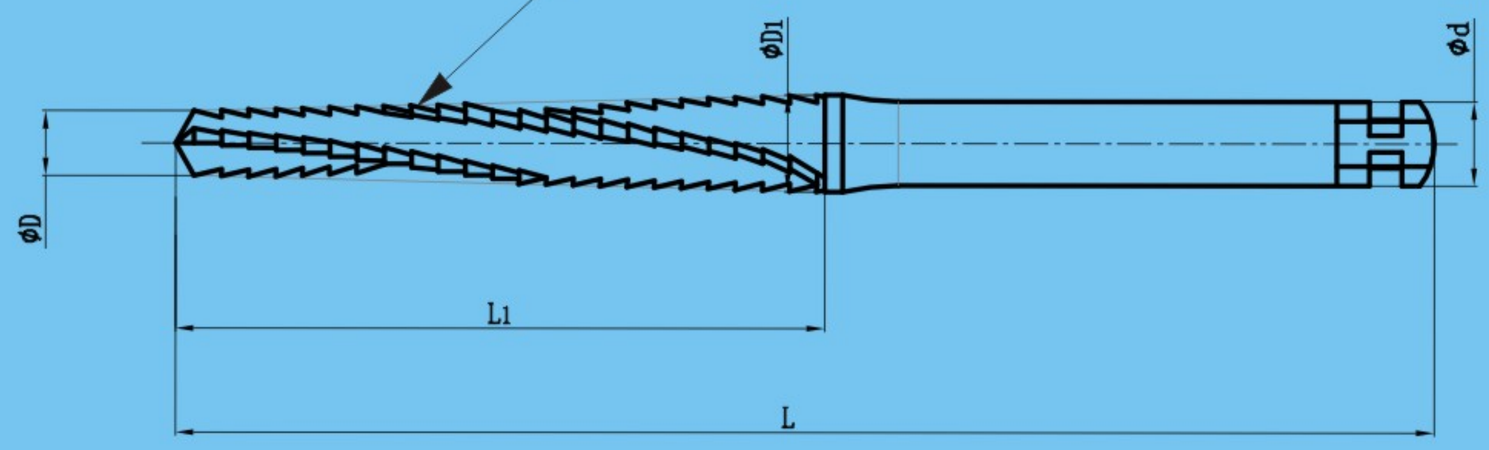

可加工任意齒間距、齒數、刃數、刃長、
錐度角度、鑽尖方式、鑽尖角度……
等側切鑽方式

We can process any pitch, number of teeth, number of blades, length of cut, angle of taper, mode of drill tip, angle of drill tip, etc.



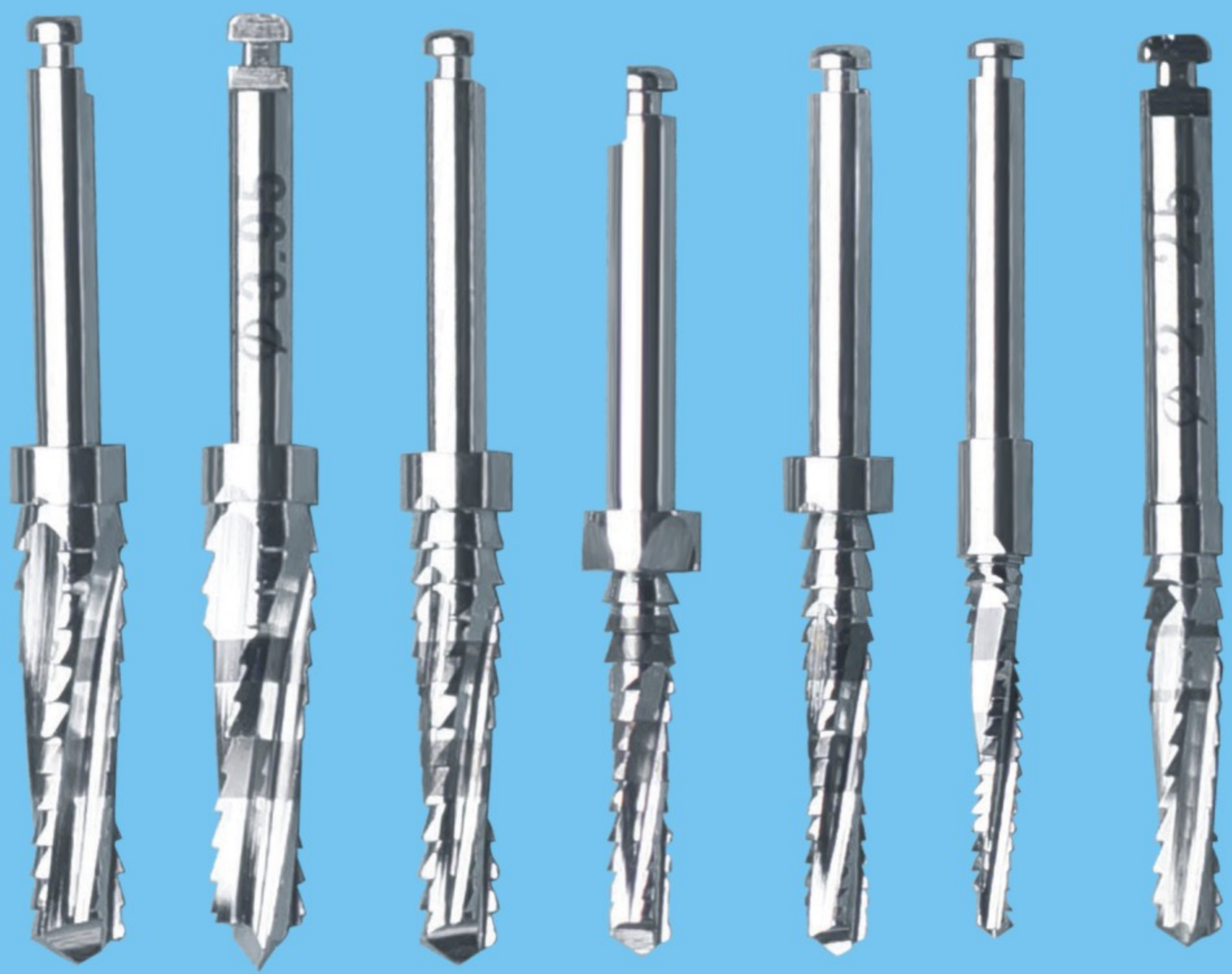

※必要可帶穿透&不穿透，不同等級加工的中空、空芯内孔加工。
With or without penetration, hollow & hollow core inner hole process with different grades.
必要に応じて、貫通付き&貫通なし、各レベル加工での中空、中空内穴加工。

★可超硬、超精研磨.任意的柄部類型.芯厚.容屑槽寬度.刃背方式.鑽尖方式.内冷却孔方式.刃部結構.刃口角度.刃口鋒利程度之要求.及高可至±0.003mm（3μm）的尺寸公差要求 We can produce with super hard and super finish grinding and satisfy your requirement of any type of shank, web thickness, width of chip flute, land, drill tip,inner cooling hole, structure of cutting edge, angle of cutting edge, degree of sharpness of cutting edge, and the dimension tolerance can be up to ±0.003mm（3μm）



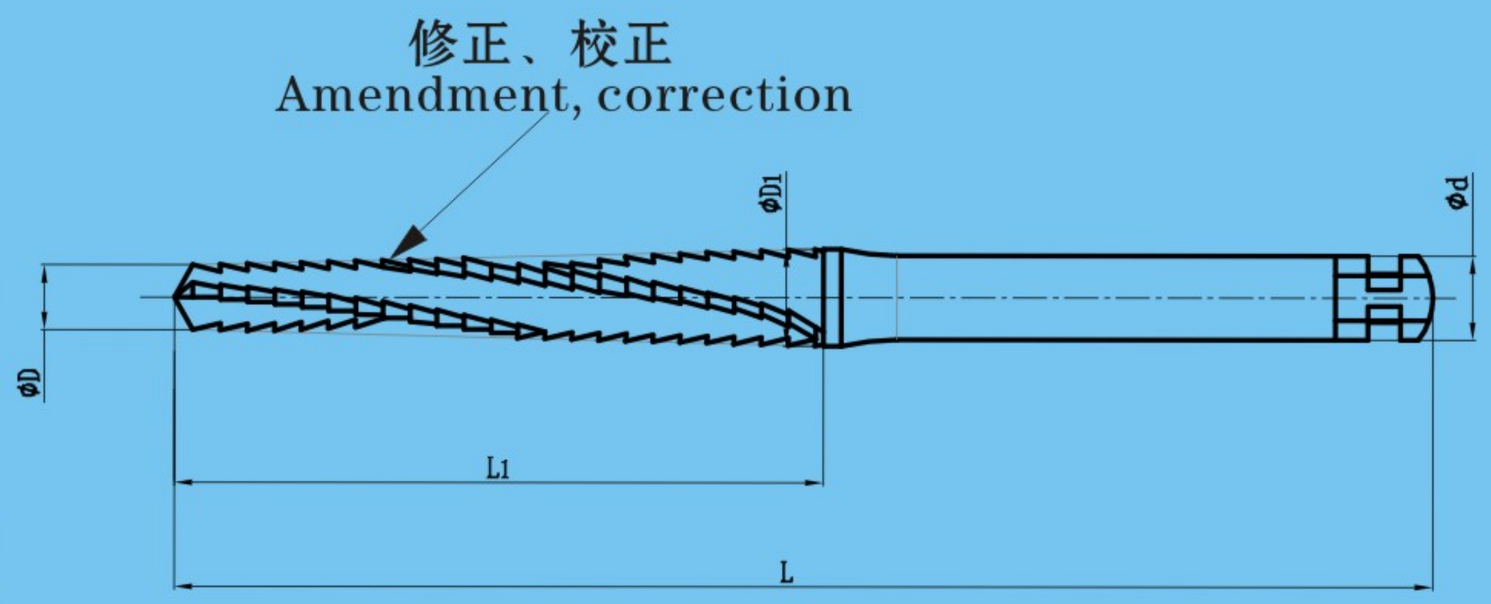

部分尺寸 some size

	刃徑ΦD Diameter	1.7	1.8	1.8	1.8
	刃長L1 Length of cut	17	15.5	18	18
	柄徑Φd Shank Dia.	2.35	2.35	2.35	2.35
	總長L Overall length	32	31	33	34.9
	刃數Z No. of flute	3	3	3	3



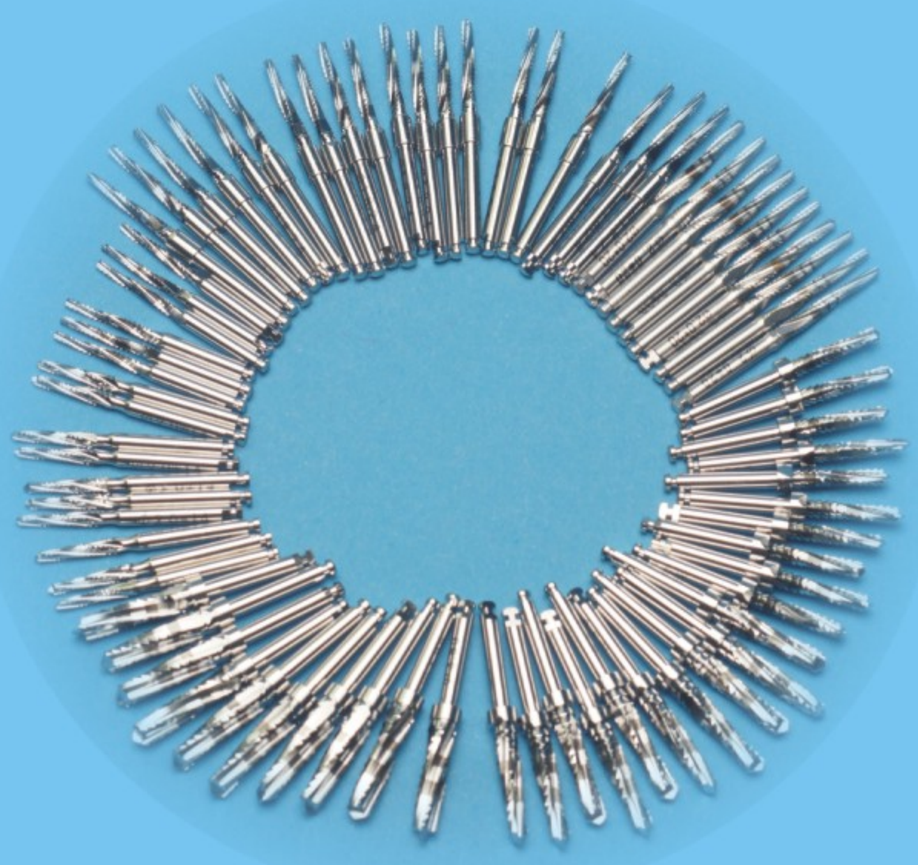



※必要可帶穿透&不穿透，不同等級加工的中空、空芯内孔加工。
With or without penetration, hollow & hollow core inner hole process with different grades.
必要に応じて、貫通付き&貫通なし、各レベル加工での中空、中空内穴加工。

★可超硬、超精研磨. 任意的柄部類型. 芯厚. 容屑槽寬度. 刃背方式. 鑽尖方式. 内冷却孔方式. 刃部結構. 刃口角度. 刃口鋒利程度之要求. 及高可至 ±0.003mm（3μm）的尺寸公差要求 We can produce with super hard and super finish grinding and satisfy your requirement of any type of shank, web thickness, width of chip flute, land, drill tip,inner cooling hole, structure of cutting edge, angle of cutting edge, degree of sharpness of cutting edge, and the dimension tolerance can be up to ±0.003mm（3μm）

醫用工具及配件系列（先鋒鑽）
Medical tools and parts series(Lance drill)
医療器具及び部品シリーズ（スポッティングドリル）

(超高防锈型(AA)&一般防锈型(A))
(High anti-rust type (AA) & general anti-rust type (A))
(超防錆型(AA)&一般防錆型(A))

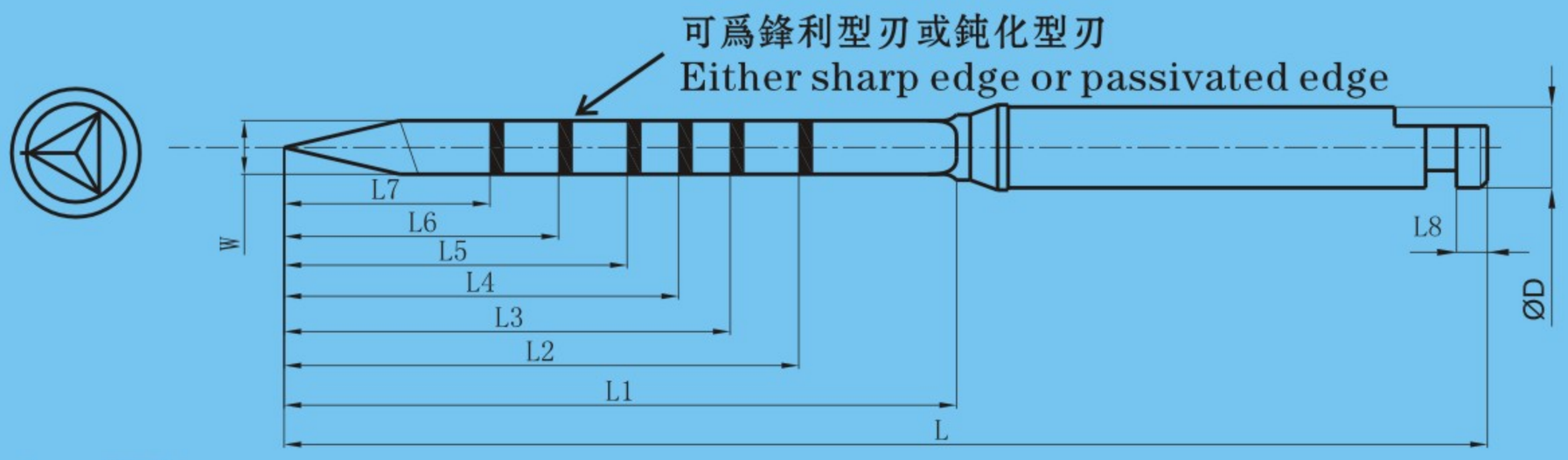

可研磨3-12棱之成型錐度

We can grind profile taper with 3-12 arris.

①表面可黄色/黑色/亞光/亮光處理
Yellow/Black/Shiny/Matt treatment

②可依要求做任意長度、寬度及深度大小的凹槽.
Grooves of any length, width and depth can be made as required.



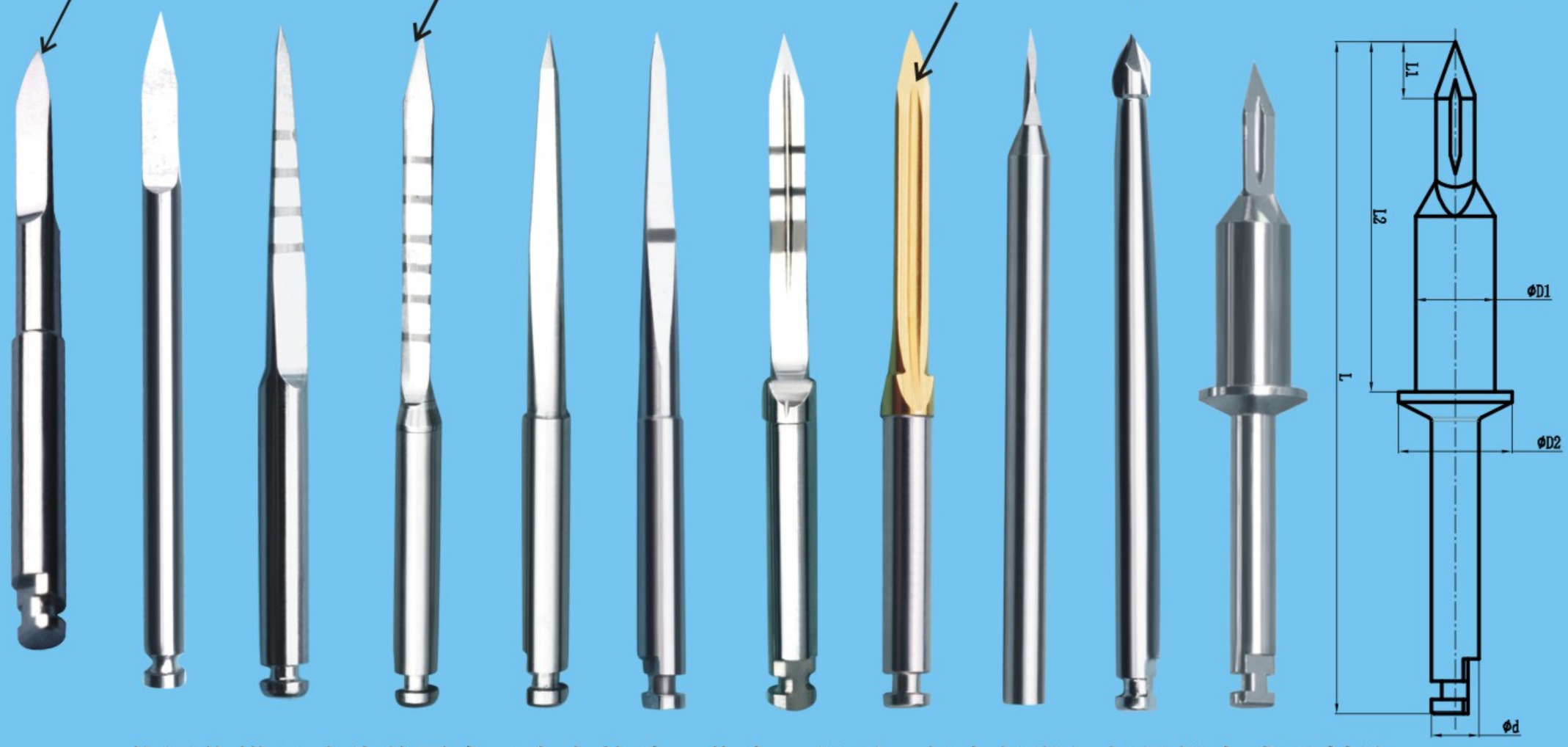

★依圖依樣尺寸公差要求可生産特殊、復合、异型、超大超微細超長組合成型制品。
We can produce special, compound, special-shaped, Super large, Super thin, Super long combined forming products according to the requirements of drawings, samples, and size tolerance.
図面、サンプルまたは寸法公差の要求により特殊、複合、異型、超大超小超長の組合せ型シリーズのフライスディスクを生産できる





（微型刃至Φ0.50mm）
(Micro edge to Φ0.50mm)

★可超硬、超精研磨、任意的柄部類型、芯厚、容屑槽寬度、刃背方式、鑽尖方式、内冷却孔方式、刃部結構、刃口角度、刃口鋒利程度之要求、及高可至±0.003mm（3μm）的尺寸公差要求 We can produce with super hard and super finish grinding and satisfy your requirement of any type of shank, web thickness, width of chip flute, land, drill tip,inner cooling hole, structure of cutting edge, angle of cutting edge, degree of sharpness of cutting edge, and the dimension tolerance can be up to ±0.003mm（3μm）

材料：
①超高防锈高耐磨高抗冲击高韧性不锈钢系列（AA)(常备常规)
②高抗冲击钨钢。
③超高耐磨高硬度钨钢。(超高耐用度,但较脆)

Material:
1. Ultra-high rust-proof, high wear-resistant, high-impact and high-toughness stainless steel series(AA)(regular stock)
2.Carbide with high shock resistance
3.Carbide with super-high wear resistance and high hardness(super -high durable,but more brittle)

表面处理：黄色/黑色/亚光处理/光亮处理
Surface treatment: yellow/black/matt treatment



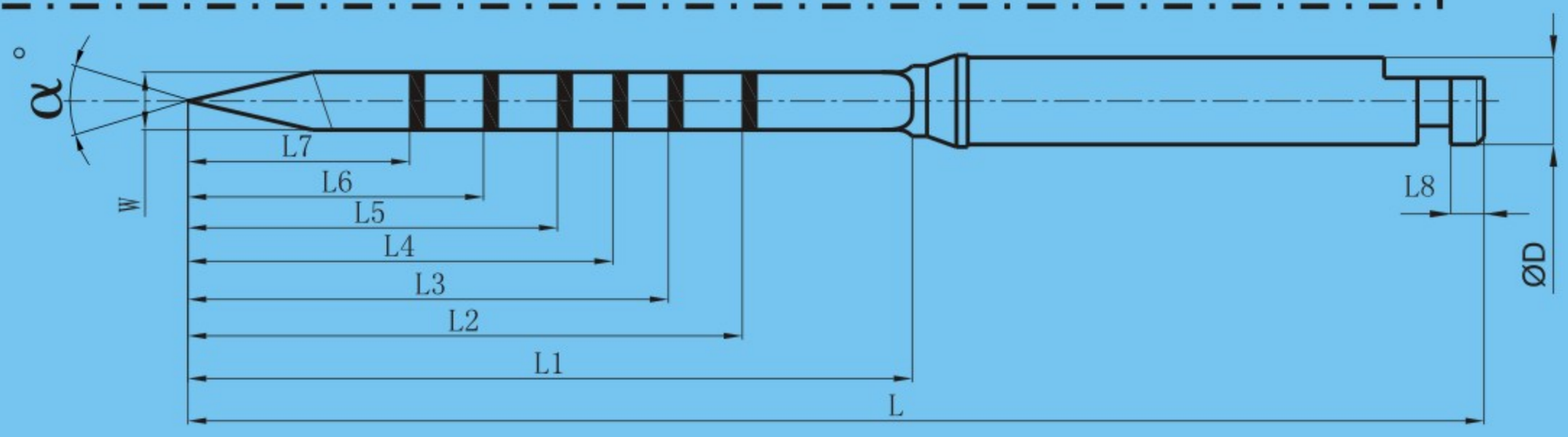



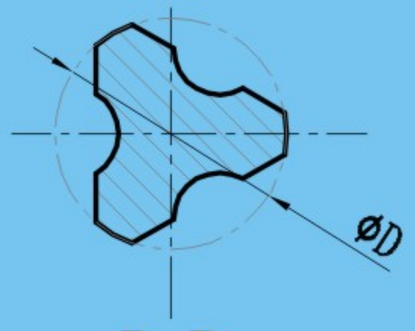

B-B

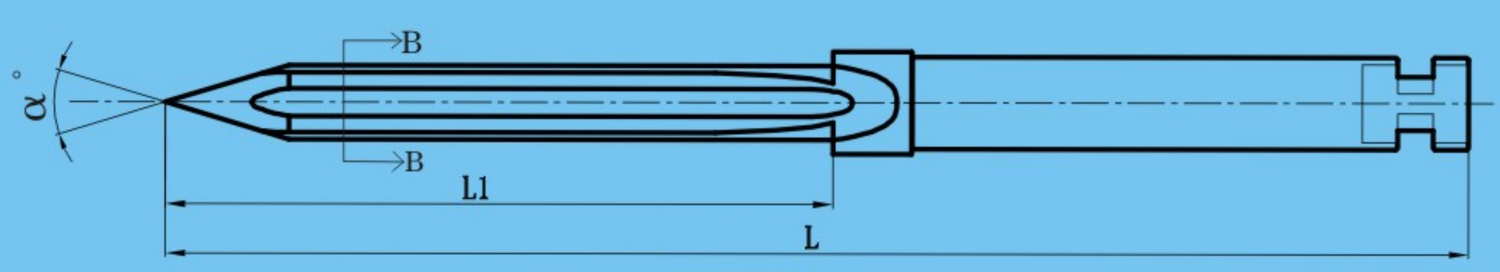



部分尺寸(AA)some size(AA)

刃徑 ϕD Diameter	2.0	2.0
刃長L1 Length of cut 刃の長さ	13.08	13.08
柄徑 ϕd Shank Dia.	2.35	2.35
總長L Overall Length 総長さ	32	36

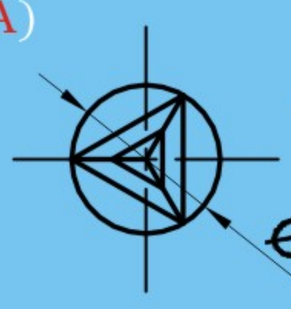

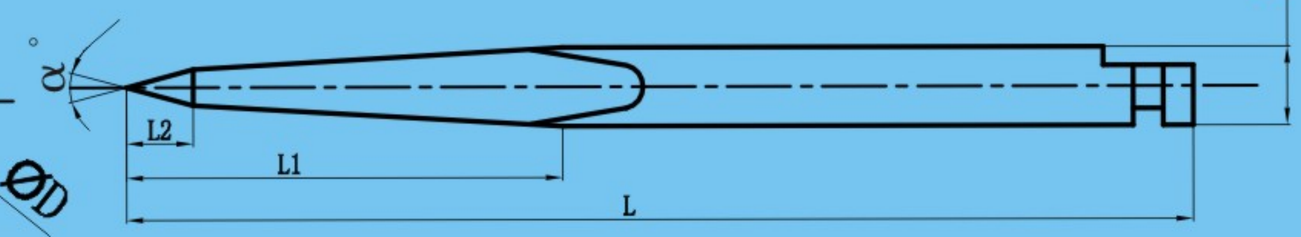



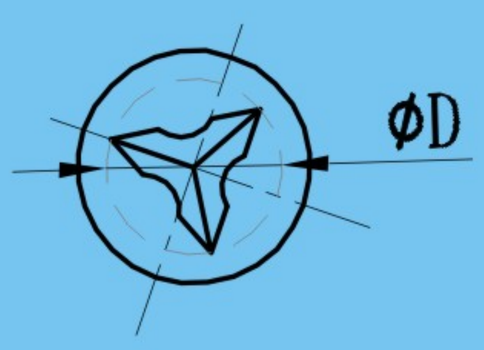

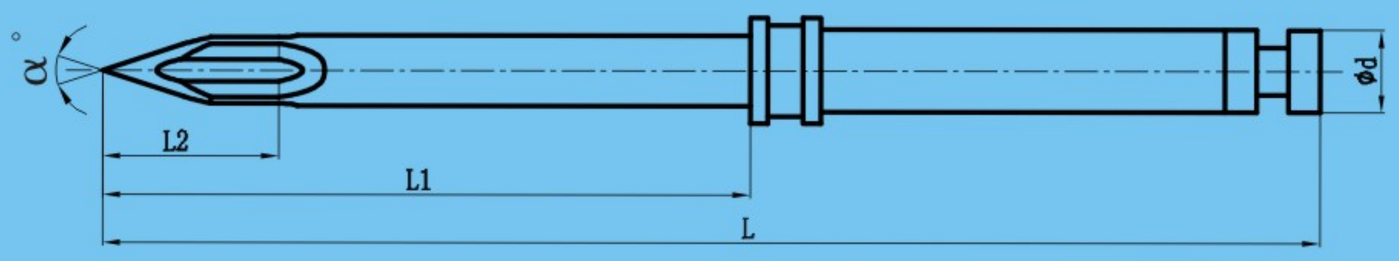



★可超硬、超精研磨.任意的柄部類型.芯厚.容屑槽寬度.刃背方式.鑽尖方式.内冷却孔方式.刃部結構.刃口角度.刃口鋒利程度之要求.及高可至±0.003mm（3μm）的尺寸公差要求 We can produce with super hard and super finish grinding and satisfy your requirement of any type of shank, web thickness, width of chip flute, land, drill tip,inner cooling hole, structure of cutting edge, angle of cutting edge, degree of sharpness of cutting edge, and the dimension tolerance can be up to ±0.003mm（3μm）

醫用工具及配件系列（先鋒鑽）
Medical tools and parts series(Lance drill)
医療器具及び部品シリーズ（スポッティングドリル）

(超高防锈型(AA)&一般防锈型(A))
(High anti-rust type (AA) & general anti-rust type (A))
(超防錆型(AA)&一般防錆型(A))

可依要求做任意長度、寬度及深度大小的凹槽.
Grooves of any length, width and depth can be made as required.

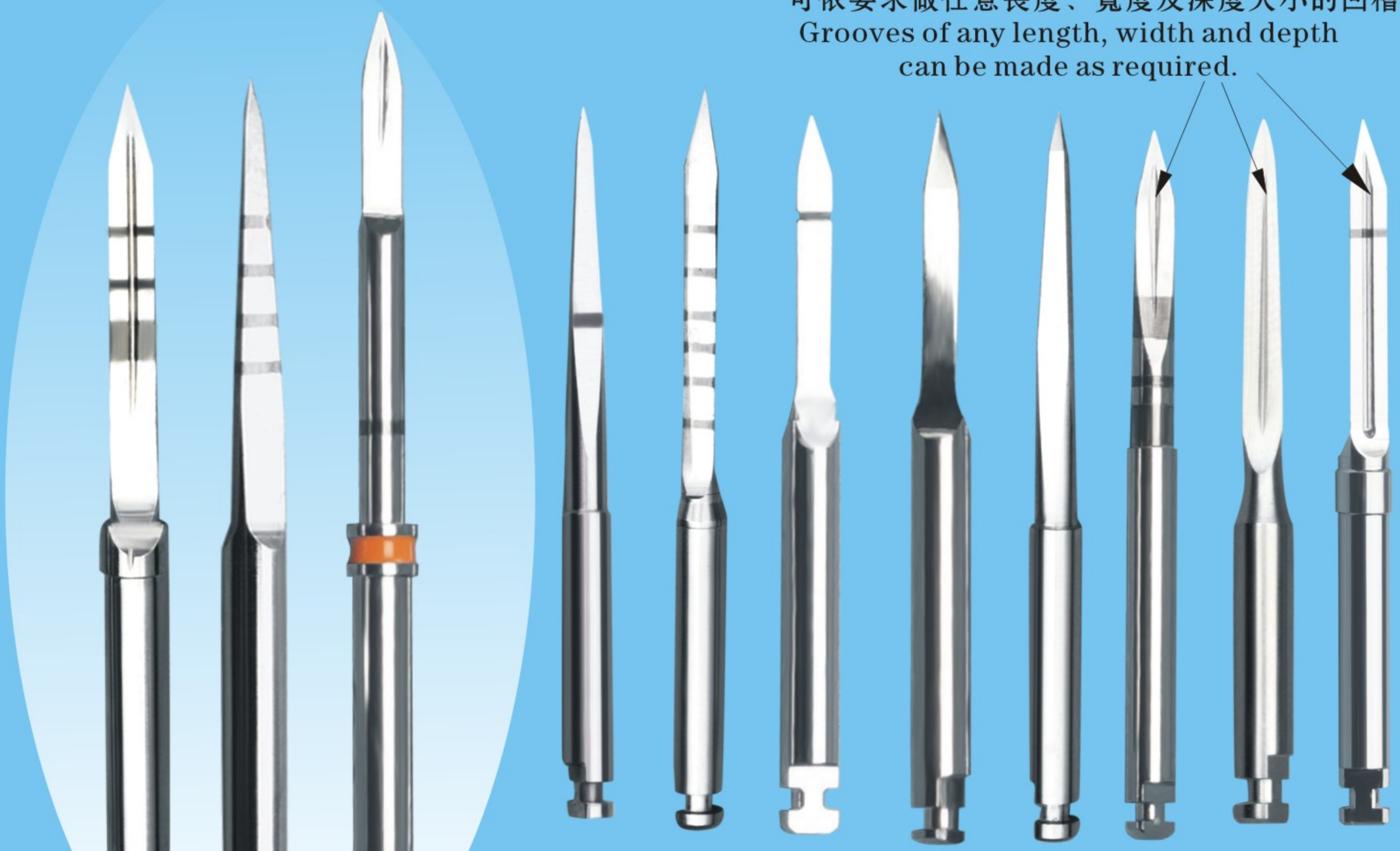

硬质合金对焊型,高硬度、超耐磨，但抗崩刃性较差些。
Hard alloy butt welded, with high hardness & superhigh wear resistance, but with relatively poor chipping resistance



★可超硬、超精研磨. 任意的柄部類型. 芯厚. 容屑槽寬度. 刃背方式. 鑽尖方式. 内冷却孔方式. 刃部結構. 刃口角度. 刃口鋒利程度之要求. 及高可至 ±0.003mm（3μm）的尺寸公差要求 We can produce with super hard and super finish grinding and satisfy your requirement of any type of shank, web thickness, width of chip flute, land, drill tip,inner cooling hole, structure of cutting edge, angle of cutting edge, degree of sharpness of cutting edge, and the dimension tolerance can be up to ±0.003mm（3μm）

LZQ