Shielded Power Inductors – RH4D28



- 5.1 × 5.1 mm footprint; 3.1mm high shielded inductors
- Low DCR and excellent current handling

Designer's Kit C362 contains 3 of each value
Core material Ferrite
Core and winding loss
Terminations RoHS compliant matte tin over nickel over phos bronze (current production) or gold over nickel over phos bronze (prior production). Other terminations available at additional cost.
Weight 0.20 – 0.24 g
Ambient temperature –40°C to +85°C with (40°C rise) Irms current.
Maximum part temperature +125°C (ambient + temp rise).
Storage temperature Component: –40°C to +125°C.
Tape and reel packaging: –40°C to +80°C
Resistance to soldering heat Max three 40 second reflows at +260°C, parts cooled to room temperature between cycles **Moisture Sensitivity Level (MSL)** 1 (unlimited floor life at <30°C / 85% relative humidity)
Failures in Time (FIT) / Mean Time Between Failures (MTBF) 38 per billion hours / 26,315,789 hours, calculated per Telcordia SR-332
Packaging 600/7″ reel, 2500/13″ reel; Plastic tape: 12 mm wide, 0.35 mm thick, 8 mm pocket spacing, 3.25 mm pocket depth
PCB washing Tested to MIL-STD-202 Method 215 plus an additional aqueous wash.

Part number	Inductance ±20% (µH)	DCR max (Ohms)	SRF typ (MHz)	Isat (A) 10% drop	Isat (A) 20% drop	Isat (A) 30% drop	Irms (A) 20°C rise	Irms (A) 40°C rise
RH4D28-222ML_	2.2	0.020	65.0	1.76	2.08	2.30	2.00	3.30
RH4D28--332ML_	3.3	0.028	60.0	1.33	1.58	1.73	1.60	2.90
RH4D28--472ML_	4.7	0.038	48.0	1.08	1.32	1.42	1.40	2.50
RH4D28--562ML_	5.6	0.042	44.0	1.00	1.20	1.30	1.30	2.30
RH4D28--682ML_	6.8	0.050	42.0	0.98	1.14	1.24	1.20	2.16
RH4D28--822ML_	8.2	0.058	40.0	0.90	1.04	1.18	1.10	2.00
RH4D28--103ML_	10	0.070	38.0	0.85	0.98	1.13	1.00	1.90
RH4D28--123ML_	12	0.080	35.0	0.72	0.85	0.94	0.97	1.60
RH4D28--153ML_	15	0.100	32.0	0.67	0.78	0.86	0.94	1.50
RH4D28--183ML_	18	0.120	26.0	0.61	0.72	0.79	0.89	1.40
RH4D28--223ML_	22	0.145	22.0	0.54	0.64	0.70	0.87	1.30
RH4D28--273ML_	27	0.161	19.0	0.48	0.56	0.62	0.85	1.20
RH4D28--333ML_	33	0.200	18.0	0.44	0.52	0.58	0.80	1.10
RH4D28--393ML_	39	0.215	17.0	0.42	0.50	0.55	0.74	1.00
RH4D28--473ML_	47	0.270	16.0	0.38	0.46	0.51	0.71	0.95
RH4D28--563ML_	56	0.280	15.0	0.34	0.42	0.47	0.70	0.90
RH4D28--683ML_	68	0.368	12.5	0.31	0.38	0.42	0.66	0.85
RH4D28--823ML_	82	0.420	12.0	0.27	0.32	0.35	0.62	0.80
RH4D28--104ML_	100	0.580	11.5	0.26	0.30	0.33	0.55	0.69
RH4D28--124ML_	120	0.610	11.0	0.23	0.27	0.30	0.51	0.62
RH4D28--154ML_	150	0.820	10.0	0.21	0.26	0.28	0.47	0.58
RH4D28--184ML_	180	1.00	9.0	0.19	0.23	0.25	0.43	0.54
RH4D28--224ML_	220	1.10	8.0	0.18	0.21	0.23	0.39	0.50
RH4D28--274ML_	270	1.43	7.5	0.15	0.18	0.20	0.35	0.45
RH4D28--334ML_	330	1.58	6.8	0.13	0.17	0.19	0.32	0.42
RH4D28--394ML_	390	1.80	5.4	0.12	0.15	0.16	0.30	0.38

1. Please specify **termination** and **packaging** codes:

RH4D28-394MLC

Termination: L = RoHS compliant matte tin over nickel over phos bronze (current production) or gold over nickel over phos bronze (prior production).
Special order:
T = RoHS tin-silver-copper (95.5/4/0.5) over gold over nickel over phos bronze or **S** = non-RoHS tin-lead (63/37) over gold over nickel over phos bronze.

Packaging: **C** = **7″ machine-ready reel** EIA-481 embossed plastic tape (600 per full reel).
B = **Less than full reel** In tape, but not machine-ready. To have a leader and trailer added ($25 charge), use code letter C instead.
D = **13″ machine-ready reel** EIA-481 embossed plastic tape. Factory order only, not stocked (2500 per reel per full reel).

2. Inductance tested at 100 kHz, 0.1 Vrms, 0 Adc using an Agilent/HP 4263B LCR meter or equivalent.
3. SRF measured using Agilent/HP 4191A or equilvalent.
4. DC current at 25°C that causes the specified inductance drop from its value without current.
5. Current that causes the specified temperature rise from 25°C ambient. This information is for reference only and does not represent absolute maximum ratings.
6. Electrical specifications at 25°C.

Refer to Doc 362 "Soldering Surface Mount Components" before soldering.

PulseGM
www.pulsegm.com
China +86-0755-21055287
Sales@pulsegm.com

©PulseGM Inc. 2019
This product may not be used in medical or high risk applications without prior PulseGM approval.
Specification subject to change without notice.
Please check web site for latestinformation.

Shielded Power Inductors – RH4D28

Typical L vs Current

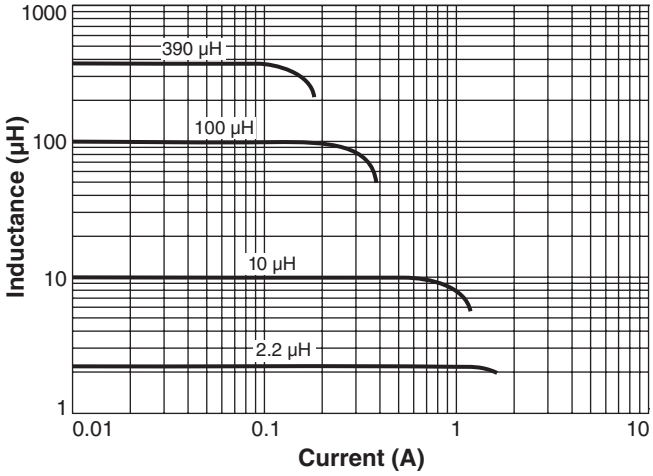

Typical L vs Frequency

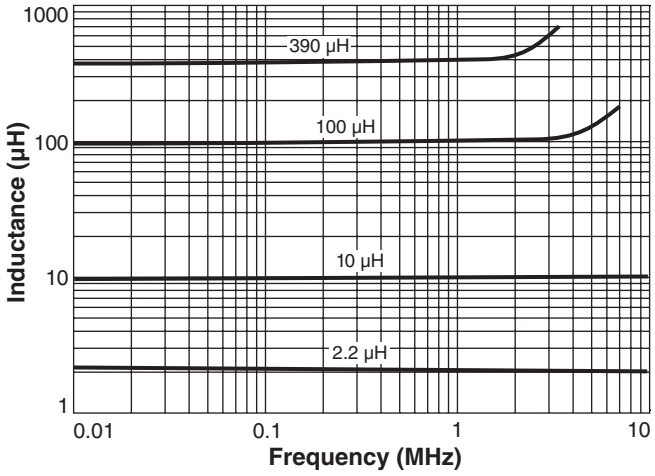

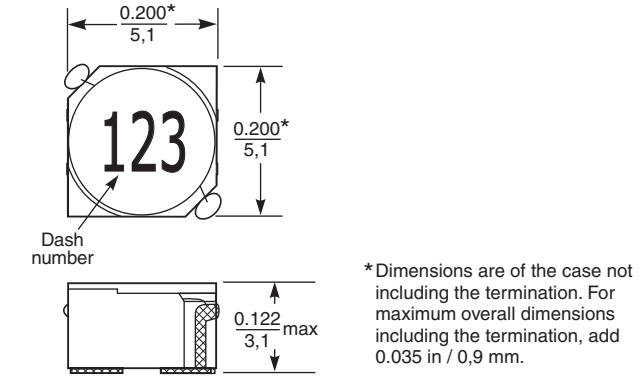

*Dimensions are of the case not including the termination. For maximum overall dimensions including the termination, add 0.035 in / 0,9 mm.

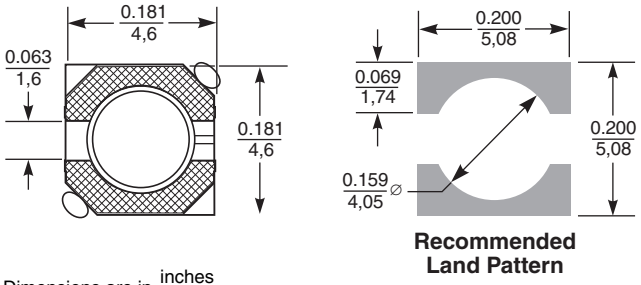

Recommended Land Pattern

Dimensions are in $\frac{\text{inches}}{\text{mm}}$

©PulseGM Inc. 2019
This product may not be used in medical or high risk applications without prior PulseGM approval.
Specification subject to change without notice.
Please check web site for latestinformation.