Shielded Power Inductors – RH10C

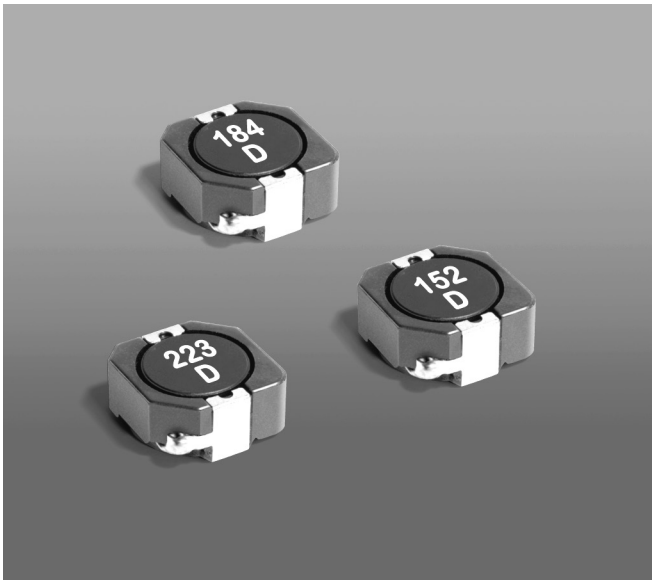

- 10 × 10.2 mm footprint; 4.8 mm high shielded inductors
- Very low DCR and excellent current handling

Designer's Kit C409 contains 3 each of all values.
Core material Ferrite
Core and winding loss
Terminations RoHS compliant matte tin over nickel over copper. Other terminations available at additional cost.
Weight: 1.7 – 1.9 g
Ambient temperature –40°C to +85°C with (40°C rise) Irms current.
Maximum part temperature +125°C (ambient + temp rise).
Storage temperature Component: –40°C to +125°C. Tape and reel packaging: –40°C to +80°C
Resistance to soldering heat Max three 40 second reflows at +260°C, parts cooled to room temperature between cycles
Moisture Sensitivity Level (MSL) 1 (unlimited floor life at <30°C / 85% relative humidity)
Failures in Time (FIT) / Mean Time Between Failures (MTBF) 38 per billion hours / 26,315,789 hours, calculated per Telcordia SR-332
Packaging 200/7″ reel; 800/13″ reel; Plastic tape: 24 mm wide, 0.35 mm thick, 16 mm pocket spacing, 5.1 mm pocket depth
PCB washing Tested to MIL-STD-202 Method 215 plus an additional aqueous wash.

Part number	Inductance (µH)	DCR max (mΩ)	SRF typ (MHz)	Isat (A) 10% drop	Isat (A) 20% drop	Isat (A) 30% drop	Irms (A) 20°C rise	Irms (A) 40°C rise
RH10C-801NL_	0.8 ±30%	4.3	180	9.60	12.0	14.1	8.19	12.0
RH10C-152NL_	1.5 ±30%	5.1	90	5.44	7.80	10.5	7.41	10.8
RH10C-222NL_	2.2 ±30%	7.2	70	4.92	6.62	8.40	6.63	9.78
RH10C-332NL_	3.3 ±30%	10.0	50	4.62	6.32	7.38	5.04	7.22
RH10C-472NL_	4.7 ±30%	11.5	38	4.36	5.62	6.46	4.90	6.90
RH10C-682NL_	6.8 ±30%	16.3	35	3.60	5.00	5.94	4.52	6.01
RH10C-822NL_	8.2 ±30%	20.0	28	3.14	4.14	4.84	4.38	5.71
RH10C-103ML_	10 ±20%	23.0	24	3.08	3.84	4.32	3.99	4.79
RH10C-153ML_	15 ±20%	36.0	20	2.46	3.06	3.44	3.51	4.26
RH10C-223ML_	22 ±20%	50.0	12	2.36	2.90	3.28	2.86	3.58
RH10C-333ML_	33 ±20%	68.0	11	1.66	2.14	2.42	2.12	2.80
RH10C-473ML_	47 ±20%	120	10	1.44	1.86	2.20	1.83	2.42
RH10C-563ML_	56 ±20%	126	10	1.36	1.70	1.90	1.71	2.28
RH10C-683ML_	68 ±20%	176	7.0	1.28	1.60	1.70	1.39	1.88
RH10C-823ML_	82 ±20%	196	6.0	1.08	1.44	1.64	1.23	1.67
RH10C104ML_	100 ±20%	224	6.0	0.99	1.20	1.36	1.09	1.48
RH10C-154KL_	150 ±10%	330	5.0	0.79	1.02	1.16	0.97	1.33
RH10C-184KL_	180 ±10%	360	4.5	0.75	0.92	1.02	0.89	1.24
RH10C-224KL_	220 ±10%	394	4.5	0.67	0.84	0.95	0.85	1.18
RH10C-334KL_	330 ±10%	748	3.0	0.57	0.69	0.76	0.57	0.82
RH10C-474KL_	470 ±10%	886	2.7	0.43	0.52	0.62	0.50	0.72

1. Please specify **termination** and **packaging** codes:

RH10C-334KLC

Termination: L = RoHS compliant matte tin over nickel over copper.
Special order:
T = RoHS tin-silver-copper (95.5/4/0.5) or **S** = non-RoHS tin-lead (63/37).

Packaging: C = 7″ machine-ready reel. EIA-481 embossed plastic tape (200 parts per full reel).
B = Less than full reel. In tape, but not machine ready. To have a leader and trailer added ($25 charge), use code letter C instead.
D = 13″ machine-ready reel. EIA-481 embossed plastic tape. Factory order only, not stocked (800 parts per full reel).

2. Inductance measured at 100 kHz, 0.1 Vrms, 0 Adc using an Agilent/HP 4263B LCR meter or equivalent.
3. SRF measured using an Agilent/HP 4192A impedance analyzer or equivalent.
4. DC current at 25°C that causes the specified inductance drop from its value without current.
5. Current that causes the specified temperature rise from 25°C ambient. This information is for reference only and does not represent absolute maximum ratings.
6. Electrical specifications at 25°C.

Refer to Doc 362 "Soldering Surface Mount Components" before soldering.

PulseGM
www.pulsegm.com
China +86-0755-21055287
Sales@pulsegm.com

©PulseGM Inc. 2019
This product may not be used in medical or high risk applications without prior PulseGM approval.
Specification subject to change without notice.
Please check web site for latestinformation.

SMT Power Inductors – RH10C

Typical L vs Current

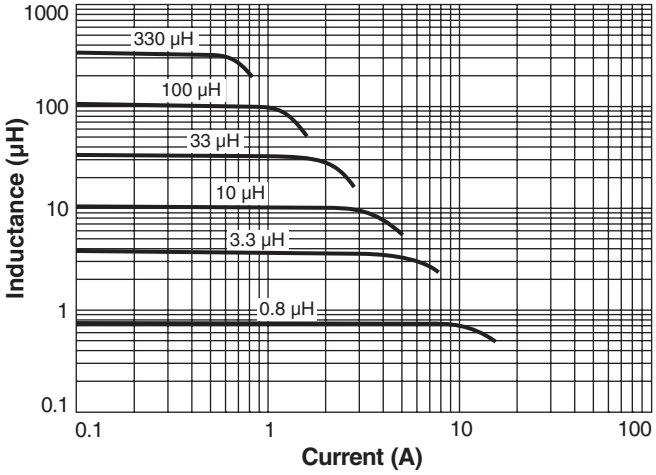

Typical L vs Frequency

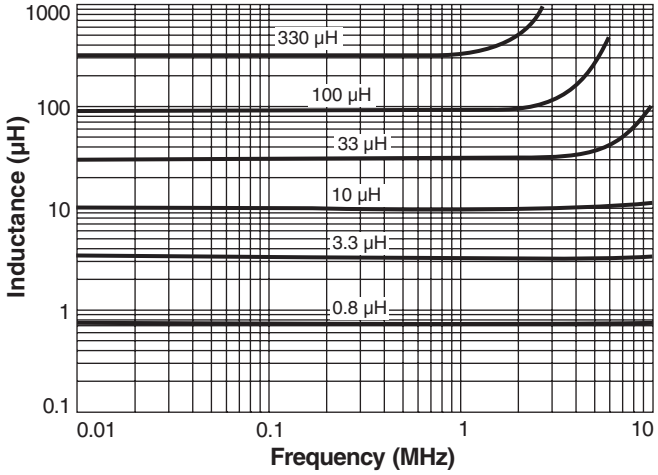

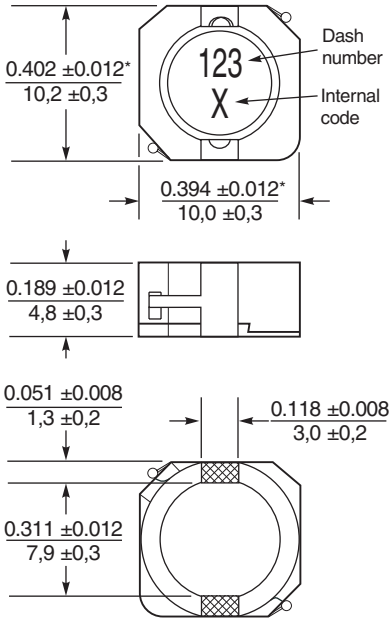

Parts manufactured prior to Sept. 2007 were marked with only the dash number.

Recommended Land Pattern

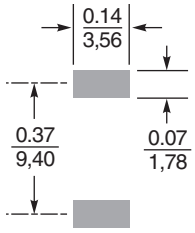

*Dimensions are of the case not including the termination. For maximum overall dimensions including the termination, add 0.005 in / 0,13 mm.

Dimensions are in inches / mm

©PulseGM Inc. 2019
This product may not be used in medical or high risk applications without prior PulseGM approval.
Specification subject to change without notice.
Please check web site for latestinformation.

PulseGM
www.pulsegm.com
China +86-0755-21055287
Sales@pulsegm.com