# Shielded Power Inductors – PFL3215

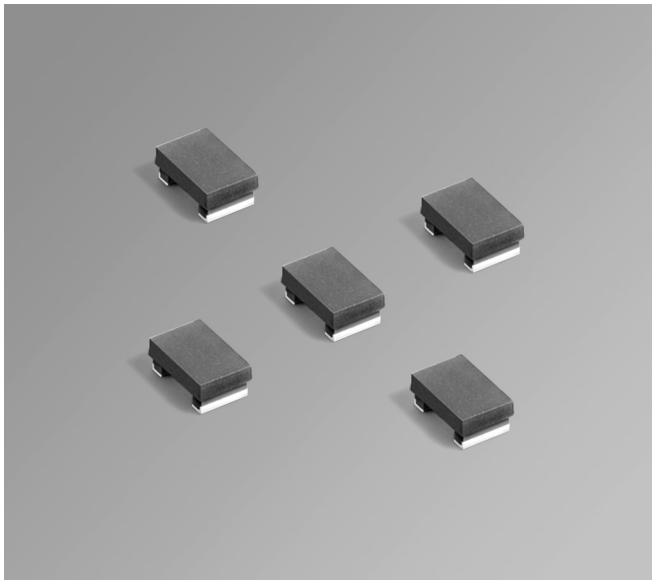

- Low cost, low profile 1206 size power inductor
- Provides the current handling of much larger inductors; up to 2700 mA

**Core material** Composite
**Core and winding loss**
**Environmental** RoHS compliant, halogen free
**Terminations** RoHS compliant matte tin over nickel over silver-platinum-glass frit. Other terminations available at additional cost.
**Weight** 31 – 39 mg
**Ambient temperature** –40°C to +85°C with (40°C rise) Irms current.
**Maximum part temperature** +125°C (ambient + temp rise).
**Storage temperature** Component: –40°C to +125°C.
Tape and reel packaging: –40°C to +80°C
**Resistance to soldering heat** Max three 40 second reflows at +260°C, parts cooled to room temperature between cycles **Moisture Sensitivity Level (MSL)** 1 (unlimited floor life at <30°C / 85% relative humidity)
**Failures in Time (FIT) / Mean Time Between Failures (MTBF)** 38 per billion hours / 26,315,789 hours, calculated per Telcordia SR-332
**Packaging** 2000/7″ reel; 7500/13″ reel. Plastic tape: 12 mm wide, 0.23 mm thick, 4 mm pocket spacing, 1.65 mm pocket depth
**PCB washing** Tested to MIL-STD-202 Method 215 plus an additional aqueous wash.

| Part number[1] | Inductance[2] ±20% (µH) | DCR (mOhms)[3] typ | DCR (mOhms)[3] max | SRF typ[4] (MHz) | Isat (mA)[5] 10% drop | Isat (mA)[5] 20% drop | Isat (mA)[5] 30% drop | Irms (mA)[6] 20°C rise | Irms (mA)[6] 40°C rise |
|---|---|---|---|---|---|---|---|---|---|
| XFL3215-681ME_ | 0.68 | 28 | 33 | 450 | 2100 | 2500 | 2700 | 1500 | 2100 |
| XFL3215-102ME_ | 1.0 | 30 | 38 | 375 | 1800 | 2100 | 2300 | 1400 | 1900 |
| XFL3215-222ME_ | 2.2 | 114 | 130 | 250 | 950 | 1200 | 1400 | 1100 | 1400 |
| XFL3215-332ME_ | 3.3 | 175 | 195 | 190 | 730 | 920 | 1100 | 820 | 1100 |
| XFL3215-472ME_ | 4.7 | 332 | 372 | 170 | 640 | 810 | 900 | 520 | 720 |
| XFL3215-682ME_ | 6.8 | 640 | 720 | 155 | 600 | 700 | 750 | 370 | 500 |
| XFL3215-103ME_ | 10 | 1290 | 1340 | 125 | 500 | 550 | 600 | 300 | 390 |
| XFL3215-153ME_ | 15 | 1800 | 2100 | 105 | 350 | 420 | 440 | 240 | 320 |
| XFL3215-333ME_ | 33 | 1700 | 1920 | 13.5 | 290 | 340 | 360 | 270 | 360 |

1. When ordering, please specify **termination** and **packaging** codes:

**PFL3215-103MEC**

**Termination:** **E** = RoHS compliant matte tin over nickel over silver.
Special order, added cost:
**Q** = RoHS tin-silver-copper (95.5/4/0.5) or **P** = non-RoHS tin-lead (63/37).

**Packaging:** **C** = 7″ machine-ready reel. EIA-481 embossed plastic tape (2000 parts per full reel).
**B** = Less than full reel. In tape, but not machine ready. To have a leader and trailer added ($25 charge), use code letter C instead.
**D** = 13″ machine-ready reel. EIA-481 embossed plastic tape. Factory order only, not stocked (7500 parts per full reel).

2. Inductance tested at 7.9 MHz, 0.1 Vrms using a PulseGM SMD-A test fixture with an Agilent/HP 4286 impedance analyzer and PulseGM-provided correlation pieces.
3. DCR measured using a micro-ohmmeter.
4. SRF measured using an Agilent/HP 8753D network analyzer and a PulseGM SMD-D test fixture.
5. DC current at 25°C that causes the specified inductance drop from its value without current.
6. Current that causes the specified temperature rise from 25°C ambient. This information is for reference only and does not represent absolute maximum ratings.
7. Electrical specifications at 25°C.

Refer to Doc 362 “Soldering Surface Mount Components” before soldering.

PulseGM®
www.pulsegm.com
China +86-0755-21055287
Sales@pulsegm.com



©PulseGM Inc. 2019
This product may not be used in medical or high risk applications without prior PulseGM approval.
Specification subject to change without notice.
Please check web site for latest information.

# XFL3215 Shielded Power Inductors

## L vs Current

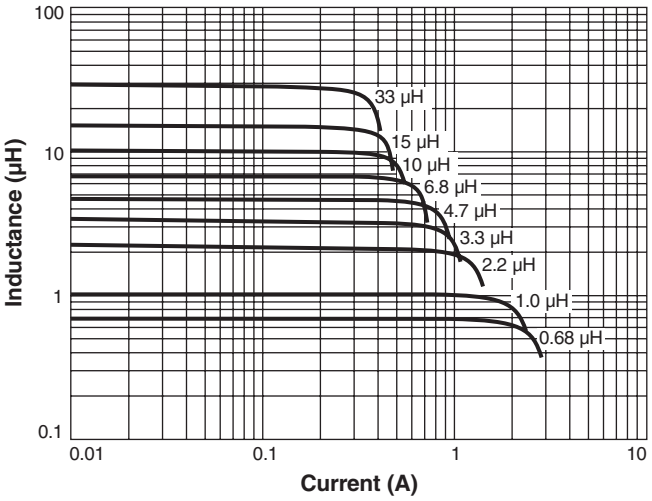


## L vs Frequency

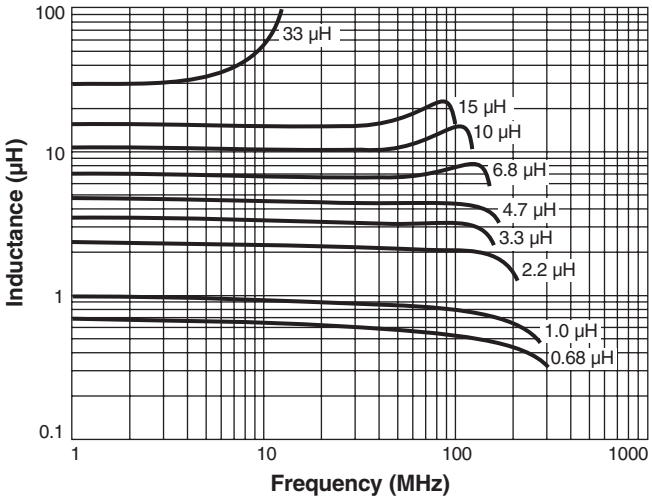


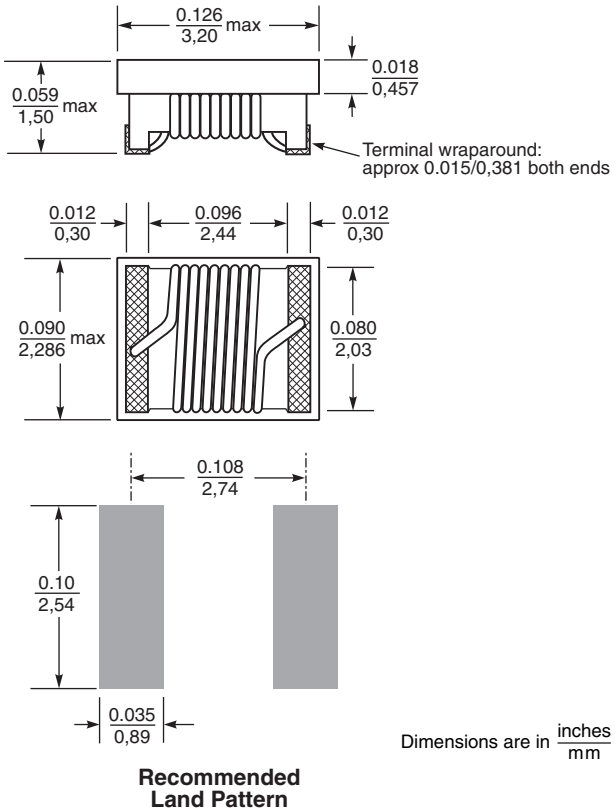


Dimensions are in inches / mm

**Recommended Land Pattern**



©PulseGM Inc. 2019
This product may not be used in medical or high risk applications without prior PulseGM approval.
Specification subject to change without notice.
Please check web site for latestinformation.