Shielded Power Inductors – XFL4514

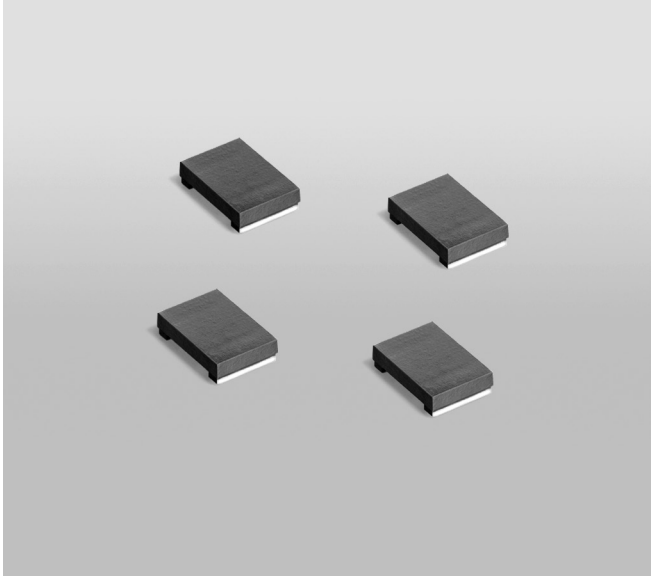

- Low cost, low profile miniature power inductor
- Only 1.4 mm high; requires a mere 16 mm² of board space
- Provides current handling of much larger inductors; up to 4.2 A.

Core material Composite
Core and winding loss
Environmental RoHS compliant, halogen free
Terminations RoHS compliant matte tin over nickel over silver-platinum-glass frit. Other terminations available at additional cost.
Weight 73.5 mg
Ambient temperature –40°C to +85°C with (40°C rise) Irms current.
Maximum part temperature +125°C (ambient + temp rise).
Storage temperature Component: –40°C to +125°C.
Tape and reel packaging: –40°C to +80°C
Resistance to soldering heat Max three 40 second reflows at +260°C, parts cooled to room temperature between cycles **Moisture Sensitivity Level (MSL)** 1 (unlimited floor life at <30°C / 85% relative humidity)
Failures in Time (FIT) / Mean Time Between Failures (MTBF) 38 per billion hours / 26,315,789 hours, calculated per Telcordia SR-332
Packaging 1000/7″ reel; 5000/13″ reel. Plastic tape: 12 mm wide, 0.21 mm thick, 8 mm pocket spacing, 1.65 mm pocket depth
PCB washing Tested to MIL-STD-202 Method 215 plus an additional aqueous wash.

Part number[1]	Inductance[2] ±20% (µH)	DCR (mOhms)[3] typ	DCR (mOhms)[3] max	SRF typ[4] (MHz)	Isat (A)[5] 10% drop	Isat (A)[5] 20% drop	Isat (A)[5] 30% drop	Irms (A)[6] 20°C rise	Irms (A)[6] 40°C rise
XFL4514-102ME_	1.0	80	96	300	2.8	3.8	4.2	1.5	2.0
XFL4514-222ME_	2.2	115	135	240	1.8	2.6	3.0	1.2	1.5
XFL4514-472ME_	4.7	220	260	180	1.4	1.9	2.1	0.89	1.2
XFL4514-682ME_	6.8	400	480	170	1.1	1.5	1.7	0.86	1.2
XFL4514-103ME_	10	680	800	140	0.97	1.2	1.4	0.49	0.67
XFL4514-153ME_	15	1140	1350	110	0.77	0.99	1.1	0.44	0.58
XFL4514-223ME_	22	2330	2750	75	0.59	0.74	0.79	0.31	0.41

1. When ordering, please specify **termination** and **packaging** codes:

XFL4514-223MEC

Termination: **E** = RoHS compliant matte tin over nickel over silver.
Special order, added cost:
Q = RoHS tin-silver-copper (95.5/4/0.5) or **P** = non-RoHS tin-lead (63/37).

Packaging: **C** = 7″ machine-ready reel. EIA-481 embossed plastic tape (1000 parts per full reel).
B = Less than full reel. In tape, but not machine ready. To have a leader and trailer added ($25 charge), use code letter C instead.
D = 13″ machine-ready reel. EIA-481 embossed plastic tape. Factory order only, not stocked (5000 parts per full reel).

2. Inductance tested at 100 kHz, 0.1 Vrms, 0 Adc.
3. DCR measured using a micro-ohmmeter.
4. SRF measured using an Agilent/HP 8753D network analyzer and a PulseGM SMD-D test fixture.
5. DC current at 25°C that causes the specified inductance drop from its value without current.
6. Current that causes the specified temperature rise from 25°C ambient. This information is for reference only and does not represent absolute maximum ratings.
7. Electrical specifications at 25°C.

Refer to Doc 362 “Soldering Surface Mount Components” before soldering.

PulseGM
www.pulsegm.com
China +86-0755-21055287
Sales@pulsegm.com

©PulseGM Inc. 2019
This product may not be used in medical or high risk applications without prior PulseGM approval.
Specification subject to change without notice.
Please check web site for latestinformation.

XFL4514 Series

L vs Current

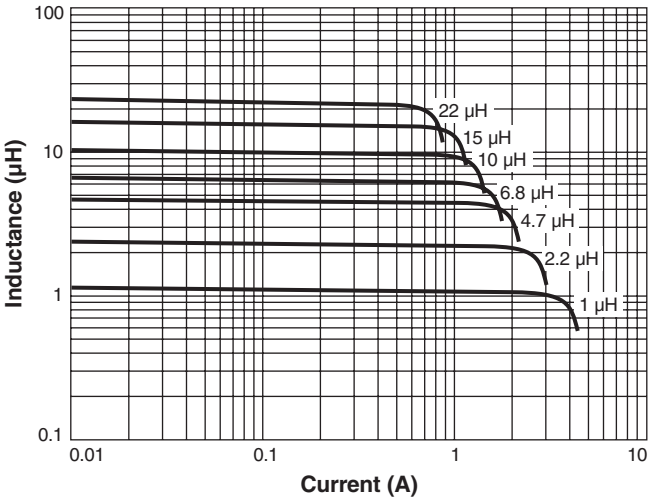

L vs Frequency

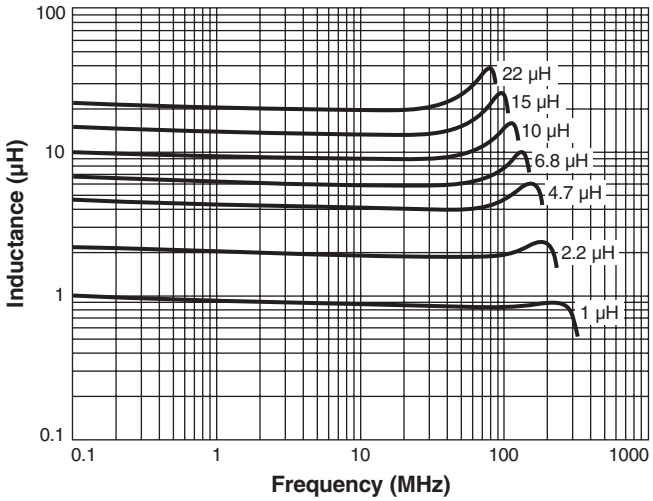

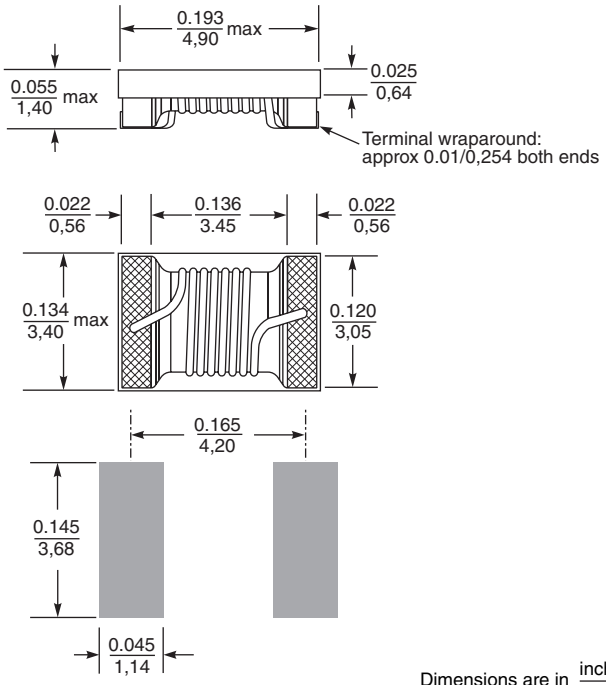

Recommended Land Pattern

Dimensions are in $\frac{\text{inches}}{\text{mm}}$

©PulseGM Inc. 2019
This product may not be used in medical or high risk applications without prior PulseGM approval.
Specification subject to change without notice.
Please check web site for latestinformation.