Backlight Inductors – DO1608 Series



- Specially designed for demanding backlighting applications
- High breakdown voltage and very low DCR

Designer's Kit C334 contains 3 of each value
Core material Ferrite
Core and winding loss See www.coilcraft.com/coreloss
Terminations RoHS compliant electroplated gold (<50 µin) over nickel over moly-manganese. Other terminations available at additional cost.
Weight 0.14 – 0.16 g
Ambient temperature –40°C to +85°C with Irms current, +85°C to +115°C with derated current
Storage temperature Component: –40°C to +115°C. Tape and reel packaging: –40°C to +80°C
Resistance to soldering heat Max three 40 second reflows at +260°C, parts cooled to room temperature between cycles
Moisture Sensitivity Level (MSL) 1 (unlimited floor life at <30°C / 85% relative humidity)
Failures in Time (FIT) / Mean Time Between Failures (MTBF) 38 per billion hours / 26,315,789 hours, calculated per Telcordia SR-332
Packaging 750/7″ reel; 2500/13″ reel Plastic tape: 12 mm wide, 0.28 mm thick, 4 mm pocket spacing, 3 mm pocket depth
PCB washing Tested to MIL-STD-202 Method 215 plus an additional aqueous wash.

Part number[1]	L ±20%[2] (mH)	DCR max (Ohms)	Insulation core-winding (MOhms)	SRF typ (MHz)	Irms[3] (mA)
Do1608-104ML_	0.10	0.95	>10	12	220
Dn1608-154ML_	0.15	1.4	>10	10	200
Dn1608-224ML_	0.22	1.7	>10	8	180
Dn1608-334ML_	0.33	2.2	>10	6	160
Dn1608-474ML_	0.47	3.8	>10	5	140
Dn1608-684ML_	0.68	4.9	>10	4	120
Dn1608-105ML_	1.0	9	>10	2	100
Dn1608-155ML_	1.5	11	>10	1	80
Dn1608-225ML_	2.2	19	>10	1	50
Dn1608-335ML_	3.3	24	>10	1	40
Dn1608-475ML_	4.7	30	>10	1	30
Dn1608-685ML_	6.8	56	>10	0.9	20
Dn1608-106ML_	10.0	74	>10	0.8	10

1. When ordering, please specify **termination** and **packaging** codes:

DO1608-106ML_C

Termination: **L** = RoHS compliant gold over nickel over moly-manganese
Special order: T = RoHS tin-silver-copper (95.5/4/0.5) or **S** = non-RoHS tin-lead (63/37).

Packaging: **C** = 7″ machine-ready reel. EIA-481 embossed plastic tape (750 parts per full reel).
B = Less than full reel. In tape, but not machine ready. To have a leader and trailer added ($25 charge), use code letter C instead.
D = 13″ machine-ready reel. EIA-481 embossed plastic tape (2500 parts per full reel).

2. Inductance tested at 0.1 Vrms, 100 kHz, 0 Adc using an Agilent/HP 4263B LCR meter or equivalent.
3. Current that causes a 30°C temperature rise from 25°C ambient.
4. Electrical specifications at 25°C.

Refer to Doc 362 "Soldering Surface Mount Components" before soldering.

PulseGM
www.pulsegm.com

China +86-0755-21055287
Sales@pulsegm.com

©PulseGM Inc. 2019
This product may not be used in medical or high risk applications without prior PulseGM approval.
Specification subject to change without notice.
Please check web site for latest information.

Backlight Inductors – DO1608 Series

Typical Inductance vs. Current

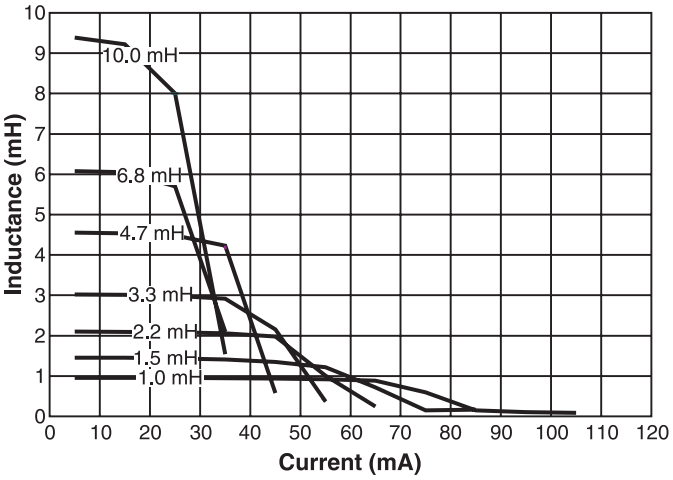

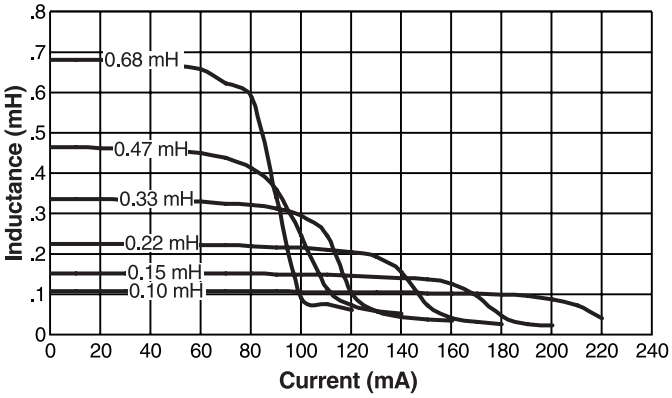

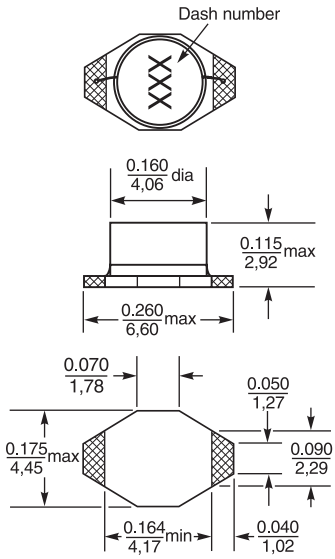

Recommended Land Pattern

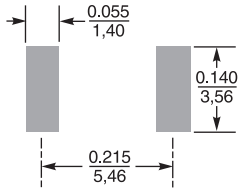

Dimensions are in inches / mm

Irms Derating

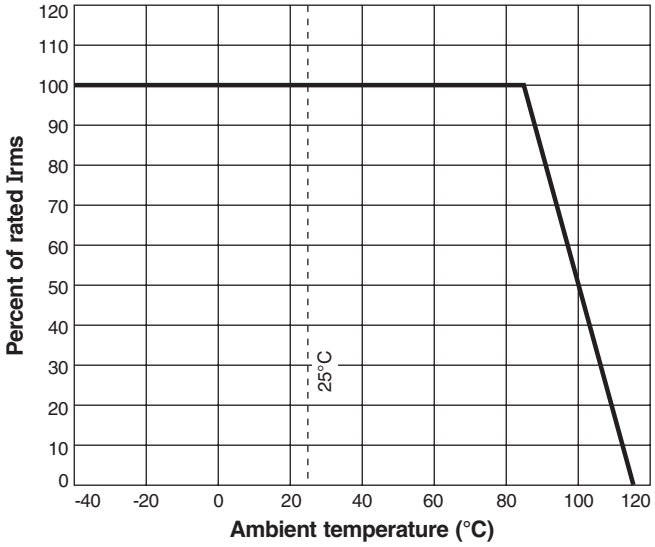

PulseGM
www.pulsegm.com
China +86-0755-21055287
Sales@pulsegm.com

©PulseGM Inc. 2019
This product may not be used in medical or high risk applications without prior PulseGM approval.
Specification subject to change without notice.
Please check web site for latestinformation.