Shielded Power Inductors MD12xx/15xx



- Soft saturation makes them ideal for VRD/VRM applications
- Special materials eliminate all thermal aging issues.

Core material Iron
Core and winding loss
Terminations RoHS tin-silver over copper. Other terminations available at additional cost.
Weight MLC12xx 1.91 – 3.04 g; MLC15xx 2.73 – 5.12 g
Ambient temperature –40°C to +85°C with Irms current
Maximum part temperature: The part may be operated without damage as long its temperature (ambient + self-heating) does not exceed +125°C.
Storage temperature Component: –40°C to +125°C. Packaging: –40°C to +80°C
Resistance to soldering heat Max three 40 second reflows at +260°C, parts cooled to room temperature between cycles
Moisture Sensitivity Level (MSL) 1 (unlimited floor life at <30°C / 85% relative humidity)
Failures in Time (FIT) / Mean Time Between Failures (MTBF) 38 per billion hours / 26,315,789 hours, calculated per Telcordia SR-332
PCB washing Tested to MIL-STD-202 Method 215 plus an additional aqueous wash.

Part number[1]	Inductance[2] ±20% (µH)	DCR (mOhm) typ	DCR (mOhm) max	SRF typ[3] (MHz)	Isat (A)[4] 10% drop	Isat (A)[4] 20% drop	Irms (A)[5] 20°C rise	Irms (A)[5] 40°C rise	Height max (mm)
10.5 mm × 11.x mm body size (see next page for 13.2 mm × 14.x mm body size)									
MD1265-361ML_	0.36	0.93	1.03	110	26.9	42.6	16.5	22.7	6.5
MD1260-401ML_	0.40	0.93	1.03	110	21.0	35.2	16.3	21.9	6.1
MD1255-421ML_	0.42	0.93	1.03	98	21.1	34.5	16.8	24.1	5.6
MD1240-451ML_	0.45	1.73	1.91	100	16.5	24.9	12.8	19.8	4.1
MD1265-701ML_	0.70	1.24	1.37	82	16.4	27.5	15.2	21.0	6.5
MD1250-801ML_	0.80	2.35	2.59	89	13.3	21.7	12.4	17.3	5.1
MD1240-901ML_	0.90	2.57	2.83	73	13.9	22.8	11.9	16.3	4.1
MD1260-122ML_	1.20	2.38	2.62	72	14.0	23.3	12.3	17.6	6.1
MD1255-122ML_	1.20	2.38	2.62	71	14.1	22.4	12.4	17.5	5.6
MD1250-132ML_	1.30	2.38	2.62	61	10.8	17.7	11.7	16.5	5.3
MD1245-152ML_	1.50	4.08	4.49	62	10.7	17.3	10.3	14.2	4.6
MD1260-172ML_	1.75	2.84	3.13	70	12.1	19.2	10.9	15.3	6.1
MD1260-222ML_	2.20	4.30	4.73	63	10.8	17.2	12.8	17.2	6.1
MD1260-332ML_	3.30	5.10	5.60	52	8.80	14.4	12.6	16.7	6.1
MD1245-402ML_	4.00	8.18	9.00	39	7.42	11.8	6.9	9.8	4.8
MD1260-472ML_	4.70	8.97	9.67	38	8.20	13.4	8.8	12.2	6.1
MD1260-682ML_	6.80	9.76	10.74	35	5.80	9.8	8.3	11.7	6.1
MD1260-822ML_	8.20	10.68	11.75	28	5.20	9.0	7.9	10.8	6.1

1. When ordering, please specify **termination** and **packaging** codes:

MLC1245-402MLC

Termination: L = RoHS compliant tin-silver over copper.
Special order:
T = RoHS tin-silver-copper (95.5/4/0.5) or
S = non-RoHS tin-lead (63/37).

Packaging: **C**= 7″ machine-ready reel. EIA-481 embossed plastic tape.
B= Less than full reel. In tape, but not machine ready. To have a leader and trailer added ($25 charge), use code letter C instead.
D= 13″ machine-ready reel. EIA-481 embossed plastic tape. Factory order only, not stocked.

2. Inductance measured at 100 kHz, 0.1 Vrms, 0 Adc using a Coilcraft SMD-A fixture in an Agilent/HP 4284A LCR meter.
3. SRF measured using an Agilent/HP4291A impedance analyzer and a PulseGM 16193 fixture.
4. DC current at 25°C that causes the specified inductance drop from its value without current.
5. Current that causes the specified temperature rise from 25°C ambient. This information is for reference only and does not represent absolute maximum ratings.
6. Electrical specifications at 25°C.

Refer to Doc 362 “Soldering Surface Mount Components” before soldering.

PulseGM
www.pulsegm.com
China +86-0755-21055287
Sales@pulsegm.com

© PulseGM Inc. 2019
This product may not be used in medical or high risk applications without prior PulseGM approval.
Specification subject to change without notice.
Please check web site for latest information.

Shielded Power Inductors – MD12xx/15xx Series

Part number[1]	Inductance[2] ±20% (µH)	DCR (mOhm) typ	DCR (mOhm) max	SRF typ[3] (MHz)	Isat (A)[4] 10% drop	Isat (A)[4] 20% drop	Irms (A)[5] 20°C rise	Irms (A)[5] 40°C rise	Height max (mm)
13.2 mm × 14.x mm body size (see previous page for 10.5 mm × 11.x mm body size)									
MD1565-451ML_	0.45	0.864	0.951	100	32.8	54.0	18.0	25.6	6.5
MD1565-501ML_	0.50	0.864	0.951	110	21.3	38.1	18.6	26.9	6.5
MD1555-551ML_	0.55	1.34	1.48	90	20.8	35.7	16.1	22.3	5.6
MD1565-801ML_	0.80	1.20	1.32	89	27.4	47.4	17.4	24.6	6.5
MD1560-901ML_	0.90	1.72	1.90	76	17.8	28.7	14.6	20.6	6.0
MD1538-102ML_	1.0	3.46	3.81	77	13.6	21.2	11.5	16.7	3.9
MD1550-102ML_	1.0	1.72	1.90	73	16.1	27.3	13.9	19.7	5.2
MD1565-142ML_	1.4	2.20	2.42	65	18.9	30.1	13.7	19.9	6.5
MD1538-152ML_	1.5	4.36	4.80	50	13.4	21.0	10.6	14.6	3.9
MD1565-202ML_	2.0	3.47	3.82	55	15.2	24.2	11.6	16.3	6.5
MD1538-222ML_	2.2	5.90	6.50	46	9.0	15.0	7.5	10.6	3.9
MD1550-252ML_	2.5	3.43	3.74	45	10.9	17.7	11.5	15.8	5.2
MD1565-282ML_	2.8	4.10	4.51	43	13.7	22.3	10.7	15.2	6.5
MD1555-302ML_	3.0	4.06	4.47	41	11.1	18.1	10.9	15.6	5.6
MD1538-332ML_	3.3	8.80	9.68	40	7.40	12.2	5.95	9.86	3.9
MD1565-372ML_	3.7	3.10	3.40	40	8.13	13.63	12.17	16.58	6.5
MD1550-452ML_	4.5	7.13	7.85	34	7.12	11.8	8.43	11.7	5.2
MD1565-472ML_	4.7	4.00	4.40	32	6.23	10.57	10.98	15.57	6.5
MD1565-602ML_	6.0	5.50	6.05	26	5.60	9.57	9.27	13.62	6.5
MD1565-732ML_	7.3	7.20	7.92	29	5.10	8.60	8.60	12.01	6.5
MD1565-922ML_	9.2	9.70	10.60	26	4.57	7.80	7.19	10.18	6.5
MD1565-113ML_	11.3	10.60	11.60	23	4.07	7.03	6.87	9.46	6.5
MD1565-133ML_	13.0	12.57	13.75	21	3.93	6.70	6.12	8.65	6.5
MD1565-153ML_	15.4	16.40	18.00	21	3.43	5.77	5.63	7.75	6.5

1. When ordering, please specify **termination** and **packaging** codes:

MD1565-153MLC

Termination: L = RoHS compliant tin-silver over copper.
Special order:
T = RoHS tin-silver-copper (95.5/4/0.5)
or **S** = non-RoHS tin-lead (63/37).

Packaging: **C** = 7″ machine-ready reel. EIA-481 embossed plastic tape.
B = Less than full reel. In tape, but not machine ready. To have a leader and trailer added ($25 charge), use code letter C instead.
D = 13″ machine-ready reel. EIA-481 embossed plastic tape. Factory order only, not stocked.

2. Inductance measured at 100 kHz, 0.1 Vrms, 0 Adc using a Coilcraft SMD-A fixture in an Agilent/HP 4284A LCR meter.
3. SRF measured using an Agilent/HP4291A impedance analyzer and a PulseGM 16193 fixture.
4. DC current at which the inductance drops the specified amount from its value without current.
5. Current that causes the specified temperature rise from 25°C ambient.
6. Electrical specifications at 25°C.

Refer to Doc 362 “Soldering Surface Mount Components” before soldering.

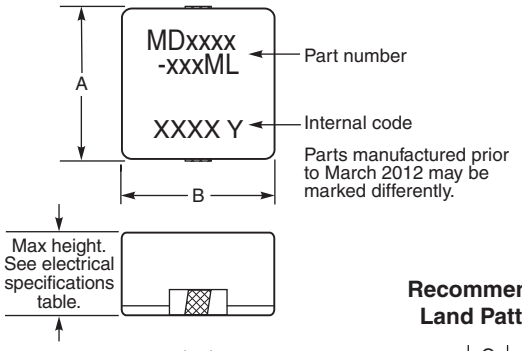

Recommended Land Pattern

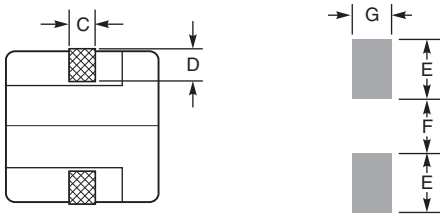

Body Size	A max	B max	C	D	E	F	G
1240	11.2	10.5	1.8	2.3	4.0	4.0	2.7
1245	11.2	10.5	1.8	2.3	4.0	4.0	2.7
1250	11.2	10.5	1.8	2.3	4.0	4.0	2.7
1255	11.4	10.5	1.8	2.3	4.0	4.0	2.7
1260	11.4	10.5	1.8	2.3	4.0	4.0	2.7
1265	11.4	10.5	1.8	2.3	4.0	4.0	2.7
1538	13.8	13.2	2.4	3.0	5.0	5.4	3.4
1550	13.8	13.2	2.4	3.0	5.0	5.4	3.4
1555	13.8	13.2	2.4	3.0	5.0	5.4	3.4
1560	13.8	13.2	2.4	3.0	5.0	5.4	3.4
1565	14.0	13.2	2.4	3.0	5.0	5.4	3.4

All dimensions are in mm.

Tape and Reel (24 mm wide plastic tape)

	Quantity 7″ reel	Quantity 13″ reel	Tape thickness (mm)	Pocket spacing (mm)	Pocket depth (mm)
MD1240	250	900	0,35	16	4,45
MD1245	200	800	0,35	16	4,95
MD1250	200	700	0,40	16	5,45
MD1255	200	700	0,40	16	5,95
MD1260	175	600	0,40	16	6,50
MD1265	150	600	0,40	16	6,70
MD1538	200	800	0,35	20	4,00
MD1550	150	600	0,40	20	5,45
MD1555	125	500	0,40	20	5,95
MD1560	125	500	0,40	20	6,20
MD1565	125	500	0,40	20	6,50

PulseGM
www.pulsegm.com
China +86-0755-21055287
Sales@pulsegm.com

© PulseGM Inc. 2019
This product may not be used in medical or high risk applications without prior PulseGM approval.
Specification subject to change without notice.
Please check web site for latest information.

Shielded Power Inductors – MD12xx/15xx Series

Typical L vs Frequency

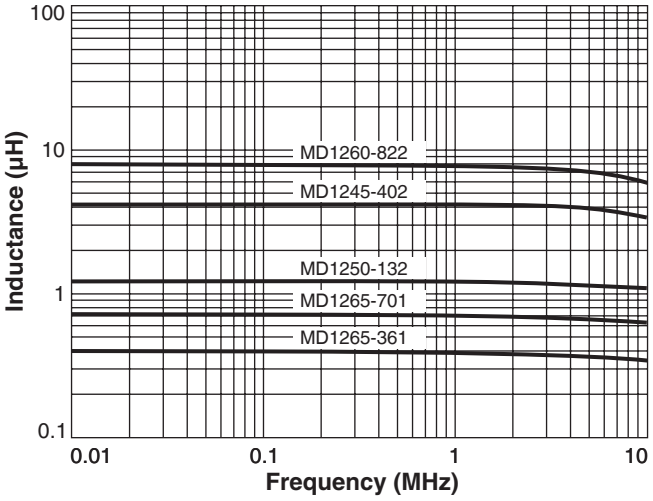

Typical L vs Current

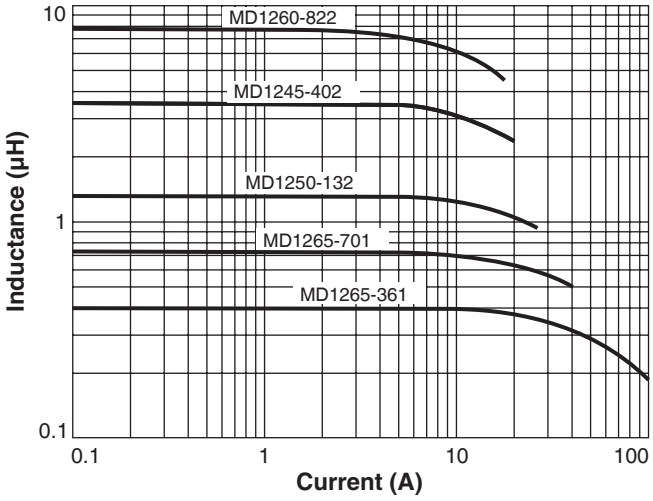

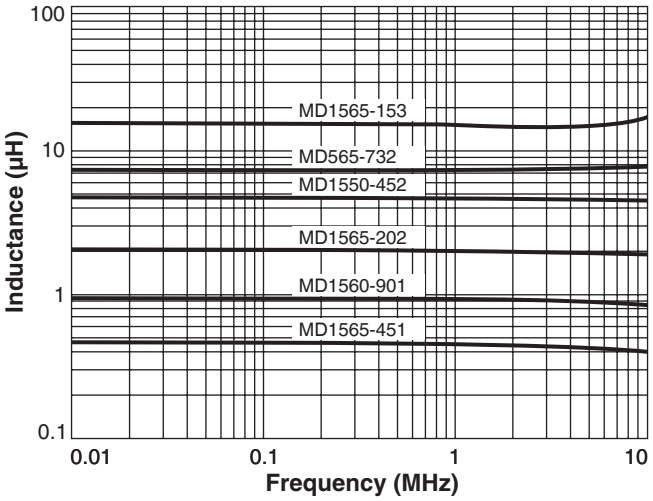

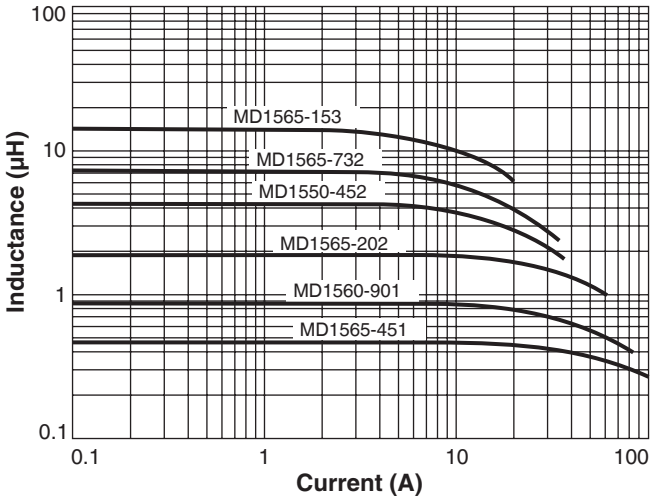

Inductance vs current is unaffected by part temperature up to 125°C.

www.pulsegm.com

China +86-0755-21055287
Sales@pulsegm.com

© PulseGM Inc. 2019
This product may not be used in medical or high risk applications without prior PulseGM approval.
Specification subject to change without notice.
Please check web site for latest information.