Shielded Power Inductors–MD1770

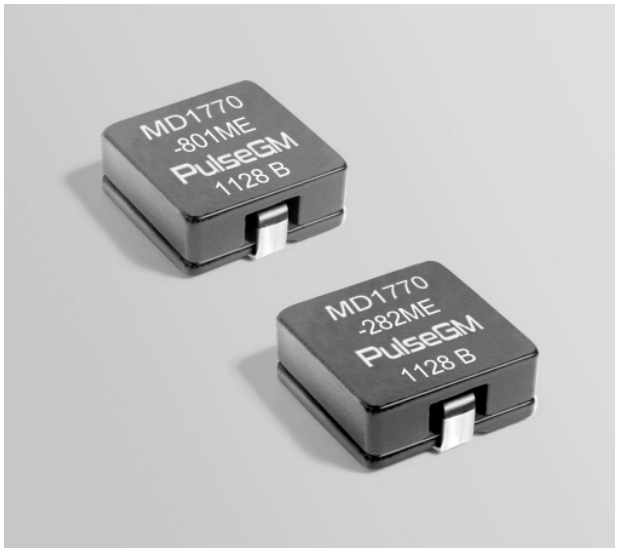

- Soft saturation makes them ideal for VRD/VRM applications
- Special materials eliminate all thermal aging issues.
- Saturation current up to 64 Amps

Part number[1]	Inductance[2] ±20% (µH)	DCR (mOhm) typ	DCR (mOhm) max	SRF typ[3] (MHz)	Isat (A)[4] 10% drop	Isat (A)[4] 20% drop	Isat (A)[4] 30% drop	Irms (A)[5] 20°C rise	Irms (A)[5] 40°C rise
MD1770-801ME_	0.80	1.15	1.30	72	28.40	49.92	64.88	20.36	28.92
MD1770-142ME_	1.40	1.80	2.00	59	20.52	35.64	51.44	16.10	24.06
MD1770-202ME_	2.00	2.70	3.00	49	14.20	24.80	37.00	12.98	19.12
MD1770-282ME_	2.80	3.60	4.00	41	13.00	22.80	33.80	11.56	15.80

1. When ordering, please specify **termination** and **packaging** codes:

MD1770-282MEC

Termination: E = RoHS compliant tin-silver over copper
Special order, added cost: **T** = RoHS tin-silver-copper (95.5/4/0.5) or
S = non-RoHS tin-lead (63/37).

Packaging: D = 13″ machine-ready reel. EIA-481 embossed plastic tape (400 parts per full reel).

B = Less than full reel. In tape, but not machine ready. To have a leader and trailer added ($25 charge), use code letter D instead.

2. Inductance measured at 100 kHz, 0.1 Vrms, 0 Adc using a PulseGM SMD-A fixture in an Agilent/HP 4263B LCR meter.
3. SRF measured using an Agilent/HP4291A impedance analyzer and an Agilent/HP 16193 fixture.
4. DC current at 25°C that causes the specified inductance drop from its value without current.
5. Current that causes the specified temperature rise from 25°C ambient. This information is for reference only and does not represent absolute maximum ratings.
5. Electrical specifications at 25°C.

Refer to Doc 362 “Soldering Surface Mount Components” before soldering.

Core material Iron

Core and winding loss

Environmental RoHS compliant, halogen free

Weight 7.8 – 8.0 g

Terminations RoHS compliant tin-silver (96.5/3.5) over copper. Other terminations available at additional cost.

Ambient temperature –40°C to +85°C with Irms current

Maximum part temperature: The part may be operated without damage as long its temperature (ambient + self-heating) does not exceed +125°C.

Storage temperature Component: –40°C to +125°C.
Tape and reel packaging: –40°C to +80°C

Resistance to soldering heat Max three 40 second reflows at +260°C, parts cooled to room temperature between cycles

Moisture Sensitivity Level (MSL) 1 (unlimited floor life at <30°C / 85% relative humidity)

Failures in Time (FIT) / Mean Time Between Failures (MTBF)
38 per billion hours / 26,315,789 hours, calculated per Telcordia SR-332

Packaging 400 per 13″ reel Plastic tape: 24 mm wide, 0.4 mm thick, 24 mm pocket spacing, 7.0 mm pocket depth

PCB washing Tested to MIL-STD-202 Method 215 plus an additional aqueous wash.

PulseGM
www.pulsegm.com

China +86-0755-21055287
Sales@pulsegm.com

©PulseGM Inc. 2019
This product may not be used in medical or high risk applications without prior PulseGM approval.
Specification subject to change without notice.
Please check web site for latestinformation.

Shielded Power Inductors – MD1770

L vs Current

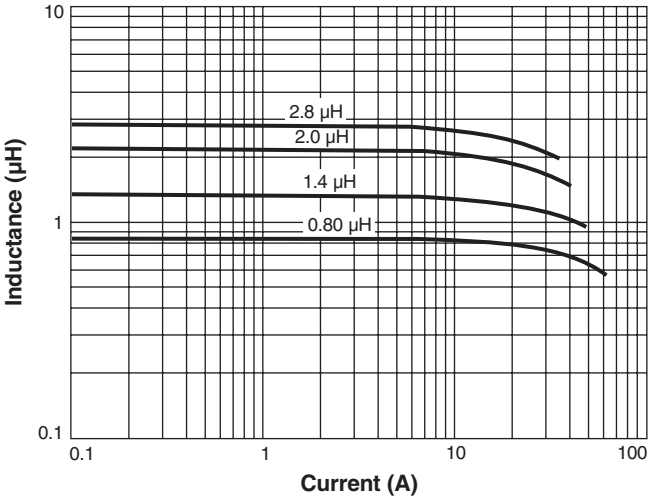

L vs Frequency

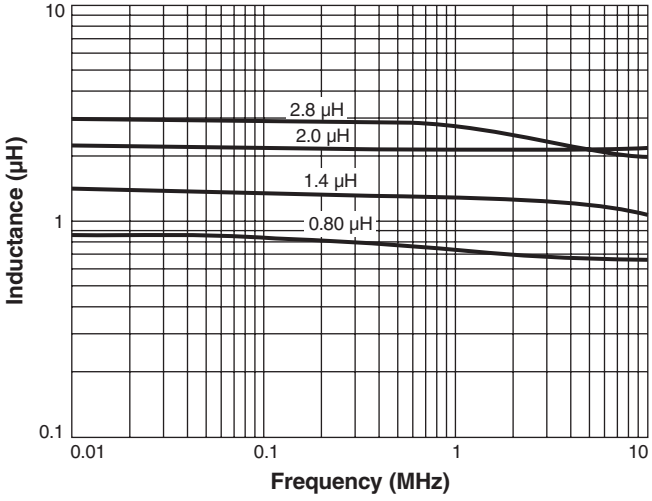

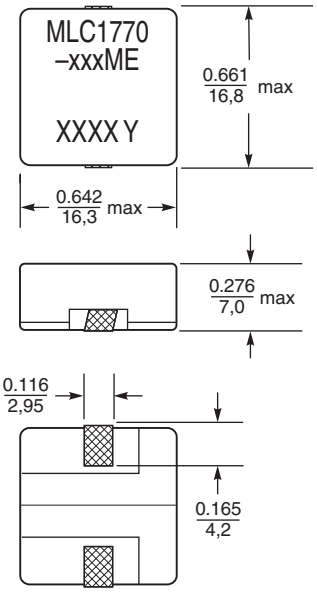

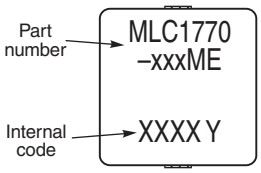

Part Marking

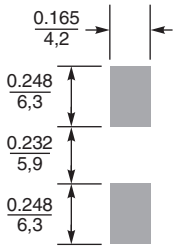

Recommended Land Pattern

Dimensions are in $\frac{\text{inches}}{\text{mm}}$

PulseGM
www.pulsegm.com

China +86-0755-21055287
Sales@pulsegm.com

©PulseGM Inc. 2019
This product may not be used in medical or high risk applications without prior PulseGM approval.
Specification subject to change without notice.
Please check web site for latestinformation.