Shielded Power Inductors–RH125



- 12.3 × 12.3 mm footprint; 6 mm high shielded inductors
- Low DCR and excellent current handling

Designer's Kit C360 contains 3 each of all values.
Core material Ferrite
Core and winding loss
Terminations RoHS compliant matte tin over nickel over phos bronze. Other terminations available at additional cost.
Weight: 2.8– 3.3 g
Ambient temperature –40°C to +85°C with (40°C rise) Irms current.
Maximum part temperature +125°C (ambient + temp rise).
Storage temperature Component: –40°C to +125°C. Tape and reel packaging: –40°C to +80°C
Resistance to soldering heat Max three 40 second reflows at +260°C, parts cooled to room temperature between cycles
Moisture Sensitivity Level (MSL) 1 (unlimited floor life at <30°C / 85% relative humidity)
Failures in Time (FIT) / Mean Time Between Failures (MTBF) 38 per billion hours / 26,315,789 hours, calculated per Telcordia SR-332
Packaging 500/13″ reel; Plastic tape: 24 mm wide, 0.35 mm thick, 16 mm pocket spacing, 6.3 mm pocket depth
PCB washing Tested to MIL-STD-202 Method 215 plus an additional aqueous wash.

Part number	Inductance (µH)	DCR (mOhms) typ	DCR (mOhms) max	SRF typ (MHz)	Isat (A) 10% drop	Isat (A) 20% drop	Isat (A) 30% drop	Irms (A) 20°C rise	Irms (A) 40°C rise
RH125-102NL_	1.0±30%	5.8	6.5	100	19.1	21.4	22.7	6.00	8.00
RH125-152NL_	1.5±30%	8.8	9.8	80.0	15.0	16.6	17.6	6.00	7.50
RH125-222NL_	2.2±30%	11.5	12.8	55.0	11.7	13.0	13.9	5.50	7.00
RH125-332NL_	3.3±30%	12.6	14.0	42.0	10.4	11.7	12.5	5.00	7.00
RH125-472ML_	4.7±20%	13.9	15.5	33.0	9.22	10.1	10.8	4.50	7.00
RH125-562ML_	5.6±20%	14.9	16.6	30.0	7.86	9.02	9.74	4.00	6.40
RH125-682ML_	6.8±20%	16.6	18.5	27.0	7.40	8.26	8.80	3.80	5.90
RH125-822ML_	8.2±20%	17.0	20.0	26.0	7.10	7.96	8.50	3.40	4.80
RH125-103ML_	10±20%	21.5	23.9	22.0	6.18	6.92	7.40	3.00	4.00
RH125-123ML_	12±20%	24.5	27.3	20.0	5.18	5.94	6.42	2.80	3.70
RH125-153ML_	15±20%	27.0	32.0	18.0	4.80	5.40	5.78	2.60	3.50
RH125-183ML_	18±20%	30.0	33.0	16.0	4.58	5.22	5.62	2.50	3.30
RH125-223ML_	22±20%	36.6	40.7	15.0	4.06	4.64	4.96	2.30	3.10
RH125-273ML_	27±20%	48.0	52.0	13.0	3.52	3.96	4.28	2.10	2.90
RH125-333ML_	33±20%	54.0	57.0	12.4	3.22	3.74	4.02	2.00	2.70
RH125-393ML_	39±20%	58.0	64.5	12.0	3.08	3.56	3.80	1.90	2.60
RH125-473ML_	47±20%	75.0	82.0	11.6	2.66	3.04	3.30	1.85	2.50
RH125-563ML_	56±20%	85.0	89.0	10.5	2.54	2.96	3.14	1.75	2.40
RH125-683ML_	68±20%	94.5	105	10.0	2.40	2.70	2.94	1.70	2.30
RH125-823ML_	82±20%	120	129	8.6	2.16	2.46	2.64	1.60	2.20
RH125-104ML_	100 ±20%	139	146	7.8	1.88	2.16	2.32	1.50	2.10
RH125-124KL_	120 ±10%	193	195	6.8	1.70	1.92	2.10	1.38	1.85
RH125-154KL_	150 ±10%	209	216	6.4	1.58	1.80	1.98	1.20	1.66
RH125-184KL_	180 ±10%	234	246	6.1	1.40	1.60	1.72	1.14	1.58
RH125-224KL_	220±10%	306	335	5.5	1.28	1.44	1.56	1.00	1.42
MSS1260-274KL_	270±10%	349	355	4.3	1.10	1.26	1.38	0.90	1.45
MSS1260-334KL_	330±10%	482	494	4.0	1.00	1.14	1.24	0.84	1.16
MSS1260-394KL_	390±10%	515	533	3.6	0.93	1.06	1.15	0.78	1.08
MSS1260-474KL_	470±10%	705	733	3.0	0.87	0.99	1.06	0.70	0.96
MSS1260-564KL_	560±10%	776	800	2.8	0.81	0.92	1.00	0.64	0.88
MSS1260-684KL_	680±10%	887	910	2.6	0.74	0.85	0.92	0.58	0.80
MSS1260-824KL_	820±10%	1130	1152	2.5	0.66	0.76	0.81	0.53	0.73
MSS1260-105KL_	1000±10%	1295	1335	2.4	0.60	0.69	0.74	0.48	0.68

1. Please specify **termination** and **packaging** codes:

RH125-184KLD

Termination: L = RoHS compliant matte tin over nickel over phos bronze. Special order: **T** = RoHS tin-silver-copper (95.5/4/0.5) or **S** = non-RoHS tin-lead (63/37).

Packaging: D = 13″ machine-ready reel. EIA-481 embossed plastic tape (500 parts per full reel).
B = Less than full reel. In tape, but not machine ready. To have a leader and trailer added ($25 charge), use code letter D instead.

2. Inductance tested at 100 kHz, 0.1 Vrms, 0 Adc using an Agilent/HP 4263B LCR meter or equivalent.
3. DCR measured on a micro-ohmmeter and a PulseGM CCF858 test fixture.
4. SRF measured using Agilent/HP 4191A or equivalent.
5. DC current at 25°C that causes the specified inductance drop from its value without current.
6. Current that causes the specified temperature rise from 25°C ambient. This information is for reference only and does not represent absolute maximum ratings.
7. Electrical specifications at 25°C.

Refer to Doc 362 "Soldering Surface Mount Components" before soldering.

PulseGM
www.pulsegm.com
China +86-0755-21055287
Sales@pulsegm.com

©PulseGM Inc. 2019
This product may not be used in medical or high risk applications without prior PulseGM approval.
Specification subject to change without notice.
Please check web site for latestinformation.

Shielded Power Inductors – RH125

Typical L vs Current

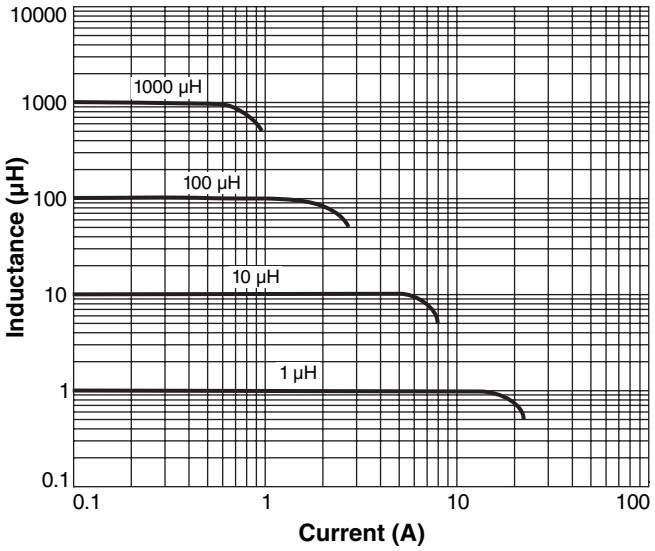

Typical L vs Frequency

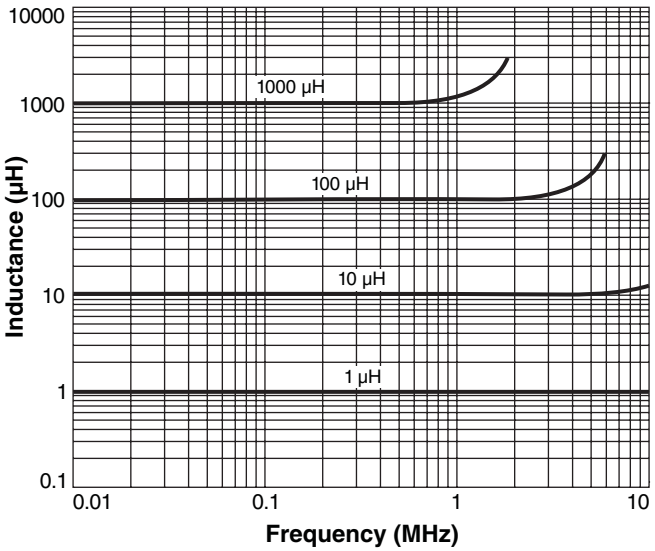

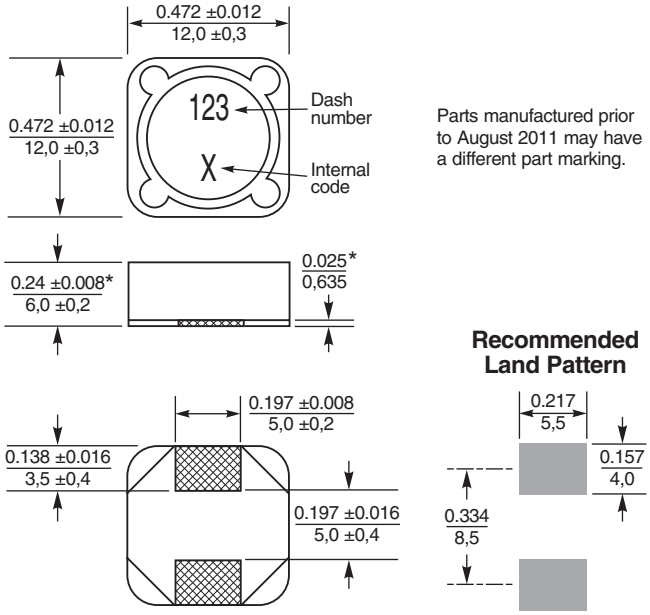

Parts manufactured prior to August 2011 may have a different part marking.

Recommended Land Pattern

* For optional tin-lead and tin-silver-copper terminations, dimensions are for the mounted part. Dimensions before mounting can be an additional 0.012 inch (0,3 mm).

Dimensions are in inches / mm

PulseGM
www.pulsegm.com

China +86-0755-21055287
Sales@pulsegm.com

©PulseGM Inc. 2019
This product may not be used in medical or high risk applications without prior PulseGM approval.
Specification subject to change without notice.
Please check web site for latestinformation.