SMT Power Inductors – MO3308P



- Handle saturating currents up to 4.2 Amps
- Defense Supply Center CID: A-A-59738

Designer's Kit C309 contains 3 each of all values
Core material Ferrite
Core and winding loss
Terminations RoHS compliant electroplated gold (<50 µin) over nickel over phos bronze. Other terminations available at additional cost.
Weight 594 – 640 mg
Ambient temperature –40°C to +85°C with Irms current **Maximum part temperature** +125°C (ambient + temp rise) **Storage temperature** Component: –40°C to +125°C
Tape and reel packaging: –40°C to +80°C
Resistance to soldering heat Max three 40 second reflows at +260°C, parts cooled to room temperature between cycles
Moisture Sensitivity Level (MSL) 1 (unlimited floor life at <30°C / 85% relative humidity)
Failures in Time (FIT) / Mean Time Between Failures (MTBF) 38 per billion hours / 26,315,789 hours, calculated per Telcordia SR-332
Packaging 1000/13″ reel Plastic tape: 24 mm wide, 0.4 mm thick, 12 mm pocket spacing, 3.7 mm pocket depth
PCB washing Tested to MIL-STD-202 Method 215 plus an additional aqueous wash.

Part number[1]	L ±20%[2] (µH)	Percent tol[3]	DCR max (Ohms)	SRF typ (MHz)	Isat[4] (A)	Irms[5] (A)
MO3308P-472_L_	4.7	**20**,10	0.036	50	4.2	3.2
MO3308P-682_L_	6.8	**20**,10	0.060	47	3.9	2.6
MO3308P-103_L_	10	**20**,10	0.085	37	2.7	2.3
MO3308P-153_L_	15	**20**,10	0.12	35	2.3	1.9
MO3308P-223_L_	22	**20**,10	0.18	26	1.8	1.5
MO3308P-333_L_	33	**20**,10	0.25	19	1.6	1.2
MO3308P-473_L_	47	**20**,10	0.32	14	1.3	1.0
MO3308P-683_L_	68	**20**,10	0.54	12	1.1	0.9
MO3308P-104_L_	100	**20**,10	0.69	11	0.87	0.73
MO3308P-154_L_	150	**20**,10	0.94	9.0	0.74	0.62
MO3308P-224_L_	220	**20**,10	1.60	6.0	0.56	0.51
MO3308P-334_L_	330	**20**,10	2.15	5.5	0.50	0.40
MO3308P-474_L_	470	**20**,10	3.30	4.5	0.40	0.33
MO3308P-684_L_	680	**20**,10	4.40	3.5	0.33	0.28
MO3308P-105_L_	1000	**20**,10	7.00	2.5	0.29	0.23

1. Please specify **tolerance**, **termination** and **packaging** codes:

MO3308P-105MLD

Tolerance: **M** = 20% **K** = 10%
Termination: **L** = RoHS compliant gold over nickel over phos bronze.
Special order:
T = RoHS tin-silver-copper (95.5/4/0.5) or **S** = non-RoHS tin-lead (63/37).
Packaging: **D** = 13″ machine-ready reel. EIA-481 embossed plastic tape (1000 parts per full reel).
B = Less than full reel. In tape, but not machine ready.
To have a leader and trailer added ($25 charge), use code letter D instead.

2. Inductance tested at 100 kHz, 0.1 Vrms, 0 Adc.
3. Tolerances in bold are stocked for immediate shipment
4. DC current at which inductance drops 10% (typ) from its value without current.
5. Current that causes a 40°C temperature rise from 25°C ambient.
6. Electrical specifications at 25°C.

Refer to Doc 362 "Soldering Surface Mount Components" before soldering.

PulseGM
www.pulsegm.com
China +86-0755-21055287
Sales@pulsegm.com

©PulseGM Inc. 2019
This product may not be used in medical or high risk applications without prior PulseGM approval.
Specification subject to change without notice.
Please check web site for latest information.

SMT Power Inductors – MO3308P Series

Typical L vs Frequency

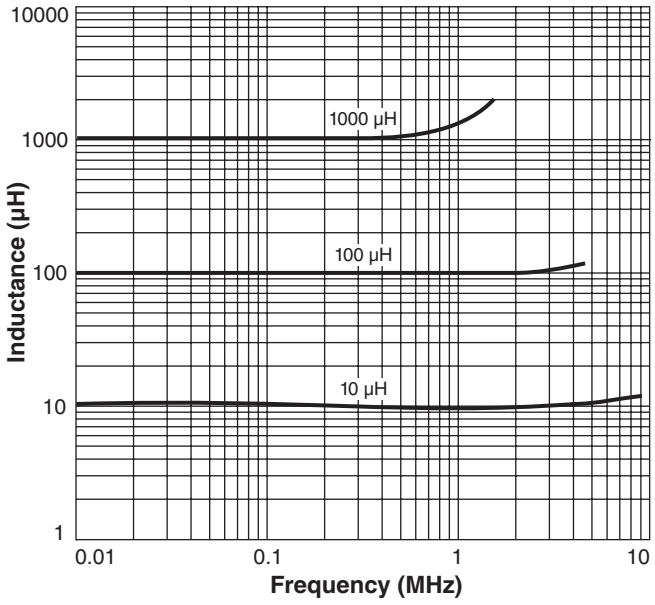

Typical L vs Current

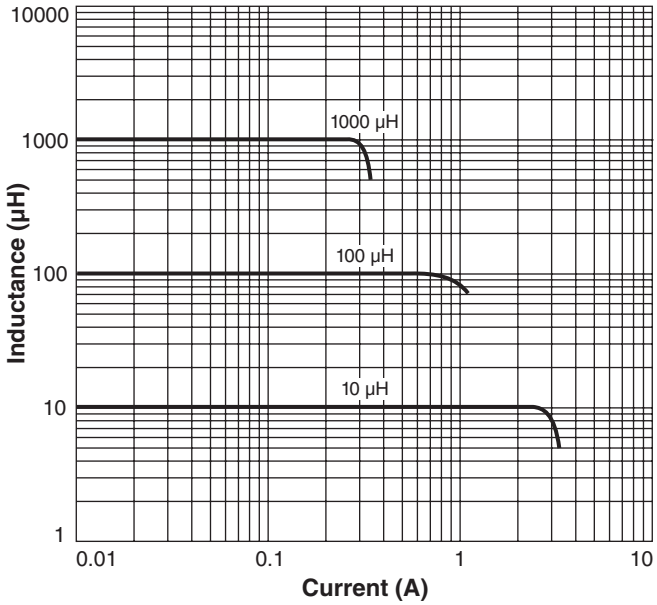

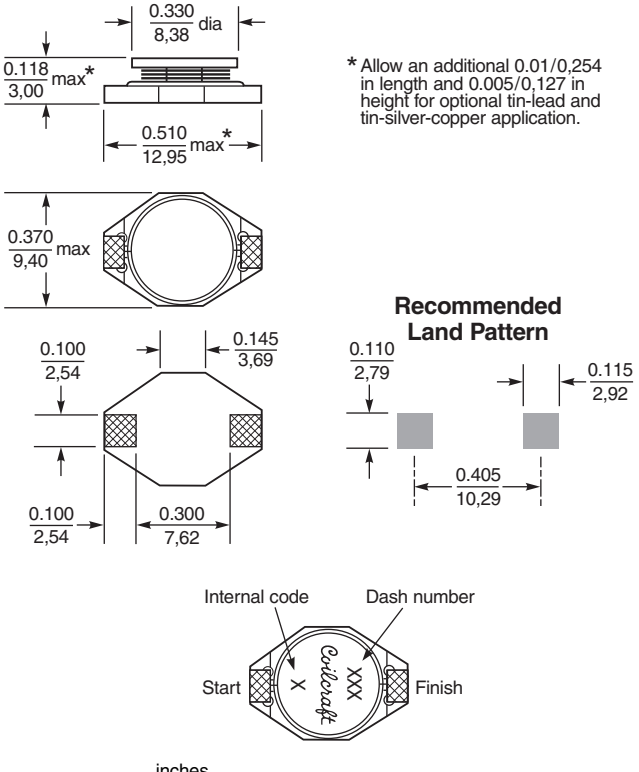

* Allow an additional 0.01/0,254 in length and 0.005/0,127 in height for optional tin-lead and tin-silver-copper application.

Dimensions are in inches / mm

PulseGM
www.pulsegm.com
China +86-0755-21055287
Sales@pulsegm.com

©PulseGM Inc. 2019
This product may not be used in medical or high risk applications without prior PulseGM approval.
Specification subject to change without notice.
Please check web site for latestinformation.