SMT Power Inductors - MO3316H Series

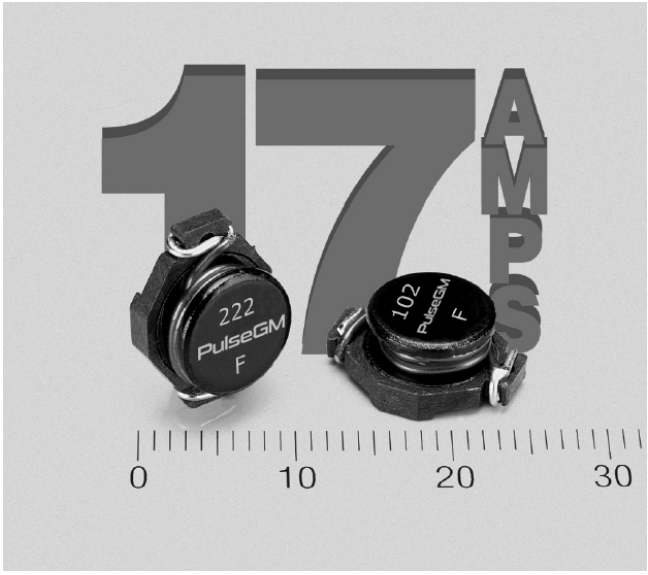

- Soldered self-leaded construction for excellent solderability.
- Very low DCR values and excellent current handling

Designer's Kit C326 contains 3 of each part
Core material Ferrite
Core and winding loss
Terminations RoHS compliant tin-silver-copper over copper. Other terminations available at additional cost.
Weight 0.95 – 1.25 g
Ambient temperature –40°C to +85°C with Irms current **Maximum part temperature** +125°C (ambient + temp rise).
Storage temperature Component: –40°C to +125°C. Tape and reel packaging: –40°C to +80°C
Resistance to soldering heat Max three 40 second reflows at +260°C, parts cooled to room temperature between cycles
Moisture Sensitivity Level (MSL) 1 (unlimited floor life at <30°C / 85% relative humidity)
Failures in Time (FIT) / Mean Time Between Failures (MTBF) 38 per billion hours / 26,315,789 hours, calculated per Telcordia SR-332
Packaging 750 per 13″ reel Plastic tape: 24 mm wide, 0.35 mm thick, 12 mm pocket spacing, 6.4 mm pocket depth
PCB washing Tested to MIL-STD-202 Method 215 plus an additional aqueous wash.

Part number[1]	L[2] (µH)	% tol[3]	DCR max (Ohms)	SRF[4] typ (MHz)	Isat[5] (A)	Irms[6] (A)
MO3316H-121ML_	0.12	**20**	0.0015	200	28	17
MO3316H-331ML_	0.33	**20**	0.002	200	20	16
MO3316H-681ML_	0.68	**20**	0.005	200	13	12
MO3316H-102ML_	1.0	**20**	0.006	100	11	10
MO3316H-152ML_	1.5	**20**	0.008	90	9.0	9.0
MO3316H-222_L_	2.2	**20**,10	0.011	80	7.8	7.4
MO3316H-272_L_	2.7	**20**,10	0.012	65	7.0	6.6
MO3316H-332_L_	3.3	**20**,10	0.014	60	6.4	5.9
MO3316H-392_L_	3.9	**20**,10	0.015	50	5.9	5.3
MO3316H-472_L_	4.7	**20**,10	0.018	45	5.4	4.8

1. When ordering, specify **tolerance**, **termination** and **packaging** codes:

MO3316H-472MLD

Tolerance: **M** = 20%, **K** = 10% (Table shows stock tolerances in bold.)
Termination: **L** = RoHS compliant tin-silver-copper over copper. **Special order: S** = non-RoHS tin-lead (63/37).
Packaging: **D** = 13″ machine-ready reel. EIA-481 embossed plastic tape (750 parts per full reel).
B = Less than full reel. In tape, but not machine ready. To have a leader and trailer added ($25 charge), use code letter C instead.

2. Inductance tested at 100 kHz, 0.1 Vrms, 0 Adc using an Agilent/HP 4263B LCR meter or equivalent.
3. Tolerances in bold are stocked for immediate shipment.
4. SRF measured using Agilent/HP 8753D network analyzer.
5. DC current at 25°C that causes an inductance drop of 10% (typ) from its value without current.
6. Current that causes a 40°C temperature rise from 25°C ambient. This information is for reference only and does not represent absolute maximum ratings.
7. Electrical specifications at 25°C.

Refer to Doc 362 "Soldering Surface Mount Components" before soldering.

PulseGM
www.pulsegm.com
China +86-0755-21055287
Sales@pulsegm.com

©PulseGM Inc. 2019
This product may not be used in medical or high risk applications without prior PulseGM approval.
Specification subject to change without notice.
Please check web site for latestinformation.

SMT Power Inductors - MO3316H Series

Typical L vs Frequency

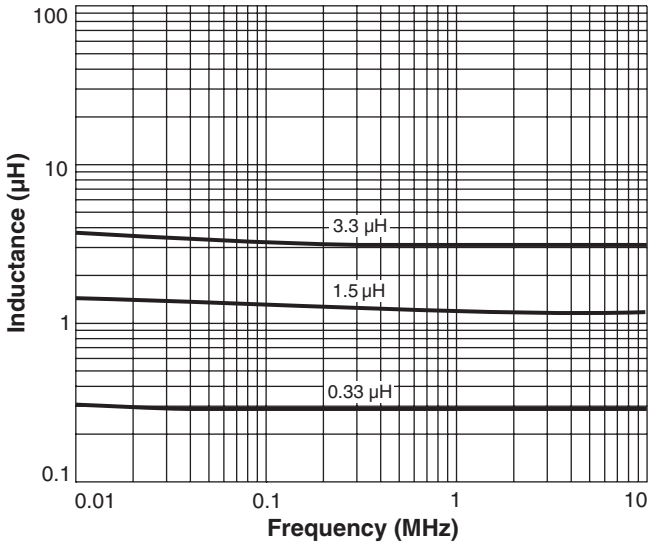

Typical L vs Current

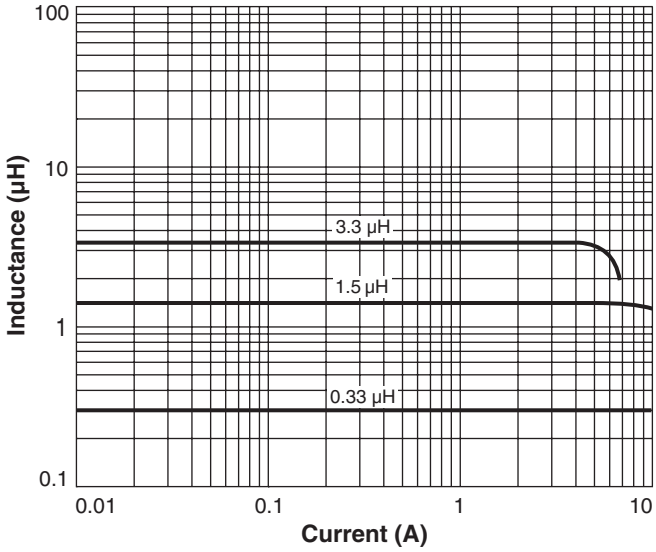

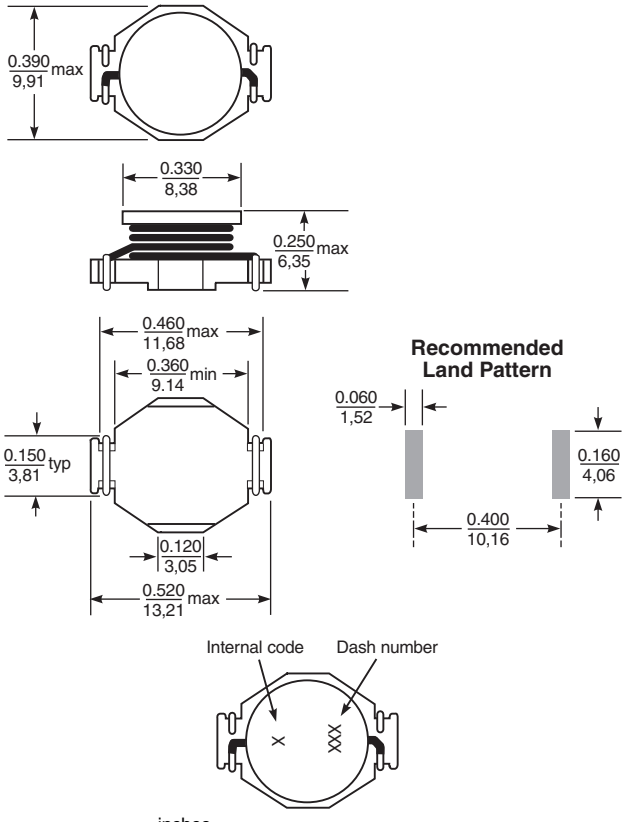

Dimensions are in inches / mm

©PulseGM Inc. 2019
This product may not be used in medical or high risk applications without prior PulseGM approval.
Specification subject to change without notice.
Please check web site for latestinformation.