SMT Power Inductors–MO3316P Series



- High energy storage and very low resistance
- High inductance values are perfect for EL driver applications.

Designer's Kit C378 contains 3 of each 20% part
Core material Ferrite
Terminations RoHS compliant electroplated gold (<50 µin) over nickel over phos bronze. Other terminations available at additional cost.
Weight 0.92 – 1.23 g
Ambient temperature –40°C to +85°C with Irms current **Maximum part temperature** +125°C (ambient + temp rise)
Storage temperature Component: –40°C to +125°C. Tape and reel packaging: –40°C to +80°C
Resistance to soldering heat Max three 40 second reflows at +260°C, parts cooled to room temperature between cycles
Moisture Sensitivity Level (MSL) 1 (unlimited floor life at <30°C / 85% relative humidity)
Failures in Time (FIT) / Mean Time Between Failures (MTBF) 38 per billion hours / 26,315,789 hours, calculated per Telcordia SR-332
Packaging 1000 per 13″ reel Plastic tape: 24 mm wide, 0.33 mm thick, 12 mm pocket spacing, 5.8 mm pocket depth
PCB washing Tested to MIL-STD-202 Method 215 plus an additional aqueous wash.

Part number[1]	L[2] (µH)	Percent tol[3]	DCR max (Ohms)	SRF typ[4] (MHz)	Isat[5] (A)	Irms[6] (A)
MO3316P-102ML_	1.0	**20**	0.009	100	9.0	6.8
MO3316P-152ML_	1.5	**20**	0.010	90	8.0	6.4
MO3316P-222_L_	2.2	**20**,10	0.012	80	7.0	6.1
MO3316P-332_L_	3.3	**20**,10	0.015	65	6.4	5.4
MO3316P-472_L_	4.7	**20**,10	0.018	45	5.4	4.8
MO3316P-682_L_	6.8	**20**,10	0.027	38	4.6	4.4
MO3316P-103_L_	10	**20**,10	0.038	30	3.8	3.9
MO3316P-153_L_	15	**20**,10	0.046	27	3.0	3.1
MO3316P-223_L_	22	**20**,10	0.085	19	2.3	2.7
MO3316P-333_L_	33	**20**,10	0.10	15	2.0	2.1
MO3316P-473_L_	47	**20**,10	0.14	12	1.6	1.8
MO3316P-683_L_	68	**20**,10	0.20	10	1.4	1.5
MO3316P-104_L_	100	**20**,10	0.28	9	1.2	1.3
MO3316P-154_L_	150	**20**,10	0.40	6	1.0	1.0
MO3316P-224_L_	220	**20**,10	0.61	5	0.80	0.80
MO3316P-334_L_	330	**20**,10	1.02	4.5	0.60	0.60
MO3316P-474_L_	470	**20**,10	1.27	3.5	0.50	0.50
MO3316P-684_L_	680	**20**,10	2.02	2.5	0.40	0.40
MO3316P-105_L_	1000	**20**,10	3.00	2.0	0.30	0.30
MO3316P-155_L_	1500	**20**,10	4.49	1.7	0.29	0.27
MO3316P-335_L_	3300	**20**,10	8.97	1.1	0.19	0.17

1. When ordering, specify **tolerance, termination** and **packaging** codes:

DO3316P-105MLD

Tolerance: **M** = 20%, **K** = 10% (Table shows stock tolerances in bold.)
Termination: **L** = RoHS compliant gold over nickel over phos bronze. Special order: **T** = RoHS tin-silver-copper (95.5/4/0.5) or **S** = non-RoHS tin-lead (63/37).
Packaging: **D** = 13″ machine-ready reel. EIA-481 embossed plastic tape (1000 parts per full reel).
B = Less than full reel. In tape, but not machine ready. To have a leader and trailer added ($25 charge), use code letter D instead.

2. Tested at 100 kHz, 0.1 Vrms, 0 Adc using an Agilent/HP 4263B LCR meter or equivalent.
3. Tolerances in bold are stocked for immediate shipment.
4. SRF >13 MHz measured using Agilent/HP 8753D network analyzer; <13 MHz using Agilent/HP 4192A.
5. DC current at 25°C that causes an inductance drop of 10% (typ) from its value without current.
6. Current that causes the specified temperature rise from 25°C ambient. This information is for reference only and does not represent absolute maximum ratings.
7. Electrical specifications at 25°C.

Refer to Doc 362 "Soldering Surface Mount Components" before soldering.

PulseGM
www.pulsegm.com
China +86-0755-21055287
Sales@pulsegm.com

©PulseGM Inc. 2019
This product may not be used in medical or high risk applications without prior PulseGM approval.
Specification subject to change without notice.
Please check web site for latestinformation.

SMT Power Inductors–MO3316P Series

Typical L vs Frequency

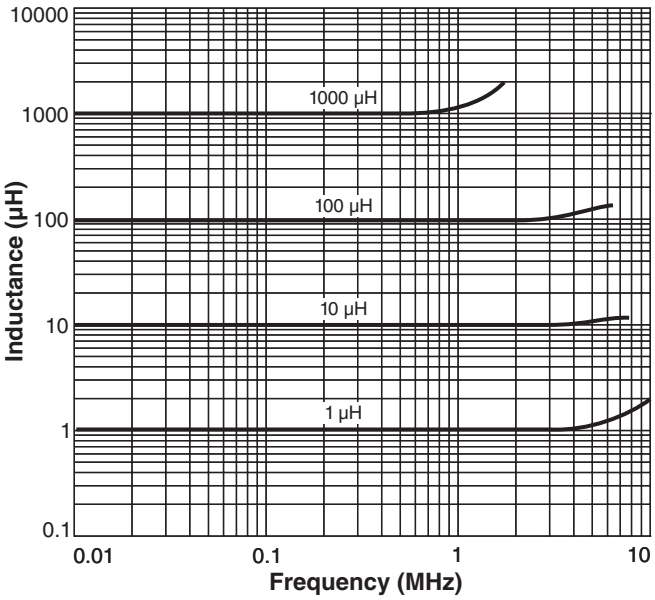

Typical L vs Current

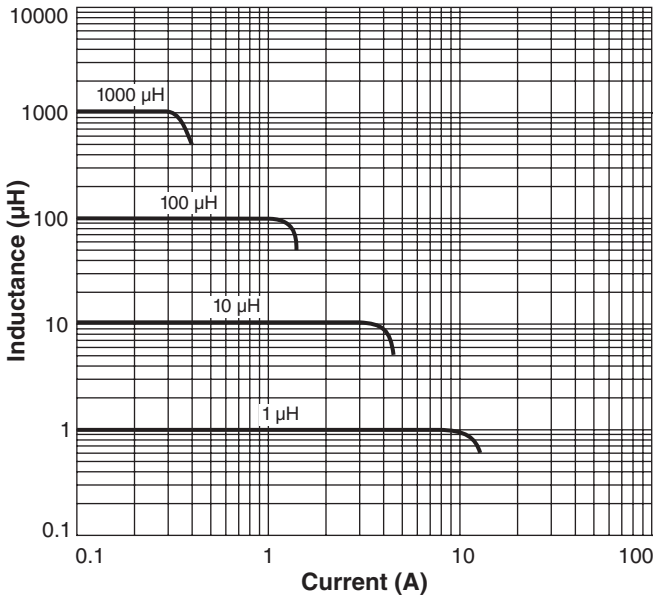

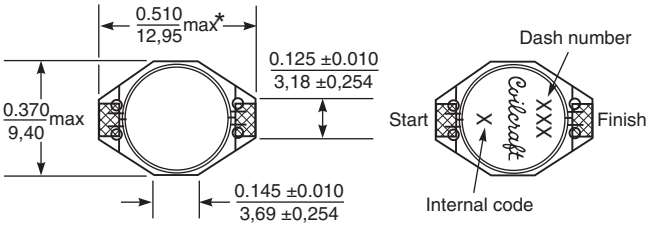

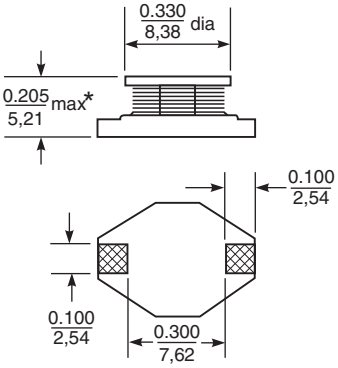

Recommended Land Pattern

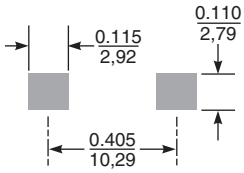

*Allow an additional 0.01/0,254 in length and 0.005/0,127 in height for optional tin-lead and tin-silver-copper application.

Dimensions are in inches / mm

©PulseGM Inc. 2019
This product may not be used in medical or high risk applications without prior PulseGM approval.
Specification subject to change without notice.
Please check web site for latest information.