SMT Power Inductors - MO5010H Series



- Irms ratings up to 15 A; saturation currents up to 30 A
- Heavy gauge wire for low DC resistance

Designer's Kit C355 contains 3 of each part
Core material Ferrite
Core and winding loss
Terminations RoHS compliant tin-silver over copper. Other terminations available at additional cost.
Weight 3.2 – 4.0 g
Ambient temperature –40°C to +85°C with Irms current, +85°C to +125°C with derated current
Storage temperature Component: –40°C to +125°C. Tape and reel packaging: –40°C to +80°C
Resistance to soldering heat Max three 40 second reflows at +260°C, parts cooled to room temperature between cycles
Moisture Sensitivity Level (MSL) 1 (unlimited floor life at <30°C / 85% relative humidity)
Failures in Time (FIT) / Mean Time Between Failures (MTBF) 38 per billion hours / 26,315,789 hours, calculated per Telcordia SR-332
Packaging 250 per 13″ reel Plastic tape: 32 mm wide, 0.38 mm thick, 24 mm pocket spacing, 7.8 mm pocket depth
PCB washing Tested to MIL-STD-202 Method 215 plus an additional aqueous wash.

Part Number[1]	Inductance[2] ±20% (µH)	DCR max (mOhm)	SRF typ[3] (MHz)	Isat[4] (A)	Irms[5] (A)
MO5010H-781ML_	0.78	2.6	156	30	15
MO5010H-152ML_	1.5	4.0	100	25	15
MO5010H-222ML_	2.2	6.1	75	20	12
MO5010H-332ML_	3.3	8.6	60	17	10
MO5010H-392ML_	3.9	10	55	15	9.0
MO5010H-472ML_	4.7	14	40	13	8.4
MO5010H-602ML_	6.0	17	35	12	7.5
MO5010H-782ML_	7.8	18	35	11	7.5
MO5010H-103ML_	10	26	28	10	6.0
MO5010H-123ML_	12	28	26	8.5	5.2
MO5010H-153ML_	15	32	20	8.0	4.4
MO5010H-223ML_	22	47	20	7.0	3.5
MO5010H-333ML_	33	66	15	5.5	3.0
MO5010H-473ML_	47	86	9	4.5	2.6
MO5010H-683ML_	68	130	8	3.5	2.3
MO5010H-104ML_	100	190	7	3.0	1.8
MO5010H-154ML_	150	250	6	2.6	1.5
MO5010H-224ML_	220	380	5	2.4	1.2
MO5010H-334ML_	330	560	4	1.9	1.0
MO5010H-474ML_	470	850	3	1.4	0.82
MO5010H-684ML_	680	1100	2.5	1.2	0.72
MO5010H-105ML_	1000	1800	2.0	1.0	0.56

1. When ordering, please specify **termination** and **packaging** codes:

MO5010H-105MLD

Termination: **L** = RoHS compliant tin-silver over copper. **Special order: T** = RoHS tin-silver-copper (95.5/4/0.5) or **S** = non-RoHS tin-lead (63/37).
Packaging: **D** = 13″ machine-ready reel. EIA-481 embossed plastic tape. **B** = Less than full reel. In tape, but not machine ready. To have a leader and trailer added ($25 charge), use code letter D instead.

2. Inductance tested at 100 kHz, 0.1 Vrms using an Agilent/HP 4284A LCR meter or equivalent.
3. SRF measured using Agilent/HP 8753D network analyzer.
4. DC current at which the inductance drops 10% (typ) from its value without current.
5. Current that causes a 40°C temperature rise from 25°C ambient.
6. Electrical specifications at 25°C.

Refer to Doc 362 "Soldering Surface Mount Components" before soldering.

PulseGM
www.pulsegm.com
China +86-0755-21055287
Sales@pulsegm.com

©PulseGM Inc. 2019
This product may not be used in medical or high risk applications without prior PulseGM approval.
Specification subject to change without notice.
Please check web site for latestinformation.

SMT Power Inductors - MO5010H Series

Typical L vs Frequency

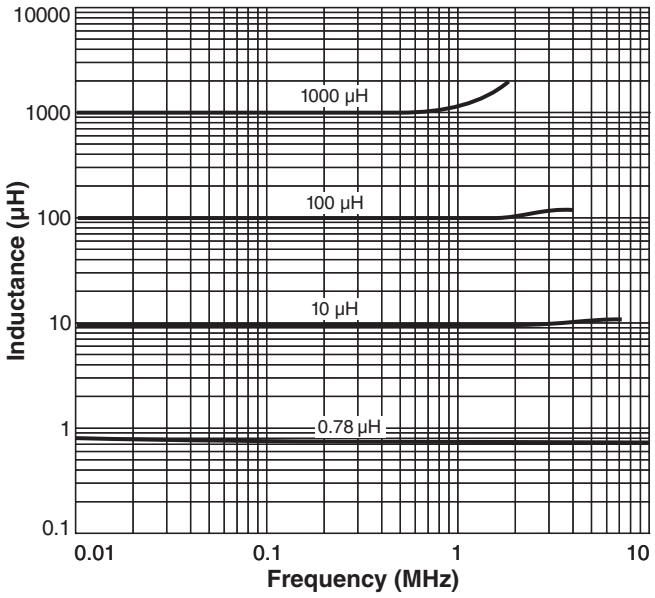

Typical L vs Current

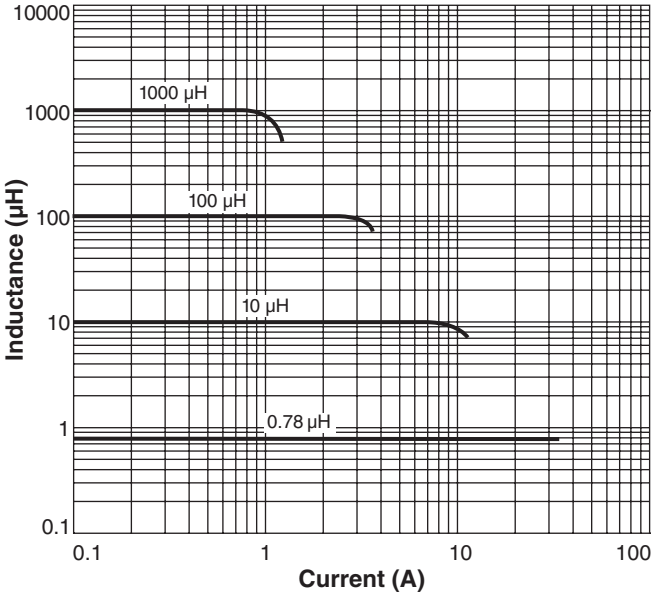

Irms Derating

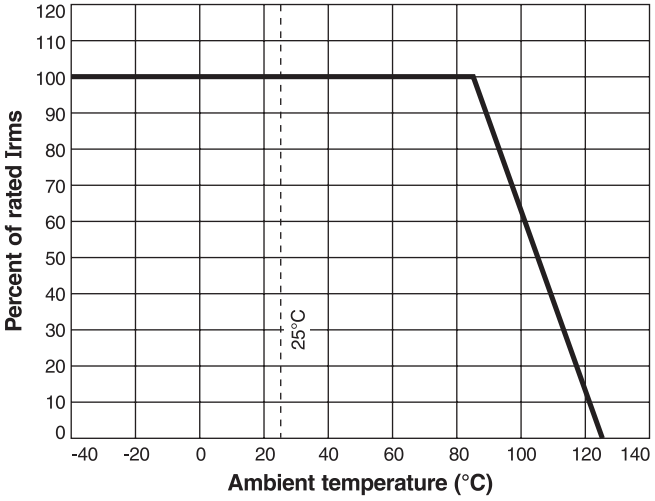

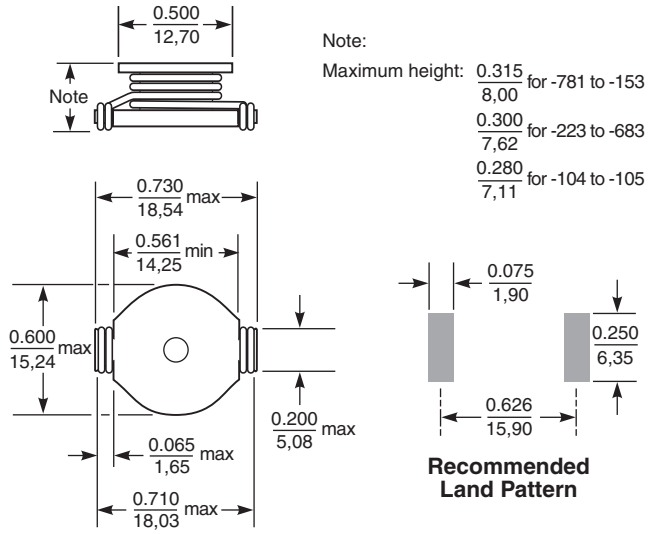

Note:
Maximum height: 0.315 / 8,00 for -781 to -153
0.300 / 7,62 for -223 to -683
0.280 / 7,11 for -104 to -105

Recommended Land Pattern

Part Marking

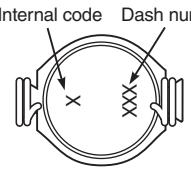

Dimensions are in inches / mm

©PulseGM Inc. 2019
This product may not be used in medical or high risk applications without prior PulseGM approval.
Specification subject to change without notice.
Please check web site for latestinformation.