SMT Power Inductors – MO5022P



- Excellent current handling – up to 28.8 A*sat*.
- Low dc resistance keeps power losses to a minimum

Designer's Kit C311 contains 3 of each 20% tolerance part
Core material Ferrite
Core and winding loss See www.coilcraft.com/coreloss
Terminations RoHS compliant electroplated gold (<50 µin) over nickel over phos bronze. Other terminations available at additional cost.
Weight 2.8– 3.9 g
Ambient temperature –40°C to +85°C with Irms current
Maximum part temperature +125°C (ambient + temp rise)
Storage temperature Component: –40°C to +125°C.
Tape and reel packaging: –40°C to +80°C
Resistance to soldering heat Max three 40 second reflows at +260°C, parts cooled to room temperature between cycles
Moisture Sensitivity Level (MSL) 1 (unlimited floor life at <30°C / 85% relative humidity)
Failures in Time (FIT) / Mean Time Between Failures (MTBF) 38 per billion hours / 26,315,789 hours, calculated per Telcordia SR-332
Packaging 250 per 13″ reel Plastic tape: 32 mm wide, 0.38 mm thick, 24 mm pocket spacing, 7.8 mm pocket depth
PCB washing Tested to MIL-STD-202 Method 215 plus an additional aqueous wash.

Part number[1]	L[2] (µH)	Percent tol[3]	DCR max (Ohms)	SRF typ[4] (MHz)	Isat (A)[5] 10% drop	Isat (A)[5] 20% drop	Irms[6] (A)
MO5022P-102ML_	1.0	**20**	0.009	80	27.6	28.8	8.6
MO5022P-222ML_	2.2	**20**	0.014	80	18.5	19.8	7.1
MO5022P-332ML_	3.3	**20**	0.018	60	14.5	15.5	6.2
MO5022P-562ML_	5.6	**20**	0.020	40	12.5	13.8	5.3
MO5022P-822ML_	8.2	**20**	0.029	30	10.3	11.5	4.8
MO5022P-103ML_	10	**20**	0.031	30	9.4	10.5	4.3
MO5022P-153ML_	15	**20**	0.036	22	7.5	8.2	4.0
MO5022P-223ML_	22	**20**	0.047	20	6.5	7.2	3.5
MO5022P-333ML_	33	**20**	0.066	15	5.2	6.1	3.0
MO5022P-473ML_	47	**20**	0.086	9	4.2	4.7	2.6
MO5022P-683_L_	68	**20**,10	0.13	8	3.7	4.1	2.3
MO5022P-104_L_	100	**20**,10	0.19	7	3.0	3.4	1.8
MO5022P-154_L_	150	**20**,10	0.25	6	2.5	2.8	1.5
MO5022P-224_L_	220	**20**,10	0.38	5	2.0	2.3	1.2
MO5022P-334_L_	330	**20**,10	0.56	4	1.7	1.9	1.0
MO5022P-474_L_	470	**20**,10	0.85	3	1.5	1.7	0.82
MO5022P-684_L_	680	**20**,10	1.1	2.5	1.2	1.3	0.72
MO5022P-105_L_	1000	**20**,10	1.8	2.0	0.95	1.1	0.56

1. Specify **tolerance**, **termination** and **packaging** codes:
   MO5022P-105MLD
   Tolerance: **M** = 20%, **K** = 10% (Table shows stock tolerances in bold.)
   Termination: **L** = RoHS compliant gold over nickel over phos bronze. Special order: **T** = RoHS tin-silver-copper (95.5/4/0.5) or **S** = non-RoHS tin-lead (63/37).
   Packaging: **D** = 13″ machine-ready reel. EIA-481 embossed plastic tape (250 parts per full reel).
   B = Less than full reel. In tape, but not machine ready. To have a leader and trailer added ($25 charge), use code letter D instead.
2. Inductance tested at 100 kHz, 0.1 Vrms, 0 Adc using an Agilent/HP 4263B LCR meter or equivalent.
3. Tolerances in bold are stocked for immediate shipment.
4. SRF >13 MHz measured using Agilent/HP 8753D network analyzer; <13 MHz using Agilent/HP 4192A.
5. DC current at which inductance drops the specified amount from its value without current.
6. Current that causes a 40°C temperature rise from 25°C ambient.
7. Electrical specifications at 25°C.

Refer to Doc 362 "Soldering Surface Mount Components" before soldering.

PulseGM
www.pulsegm.com
China +86-0755-21055287
Sales@pulsegm.com

©PulseGM Inc. 2019
This product may not be used in medical or high risk applications without prior PulseGM approval.
Specification subject to change without notice.
Please check web site for latestinformation.

SMT Power Inductors – MO5022P Series

Typical L vs Current

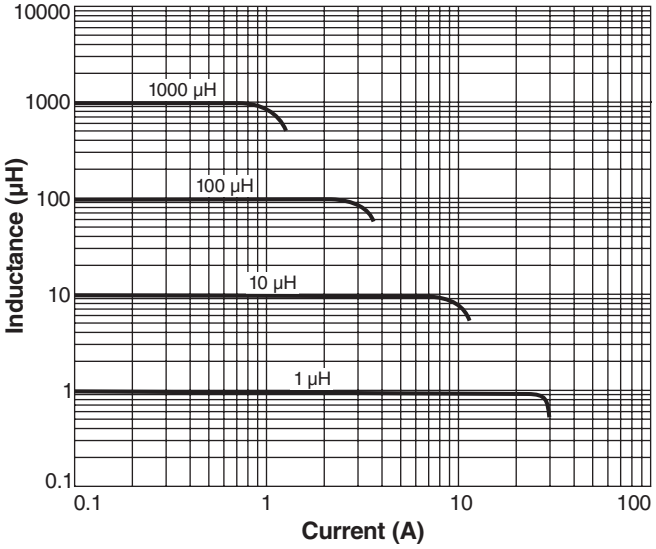

Typical L vs Frequency

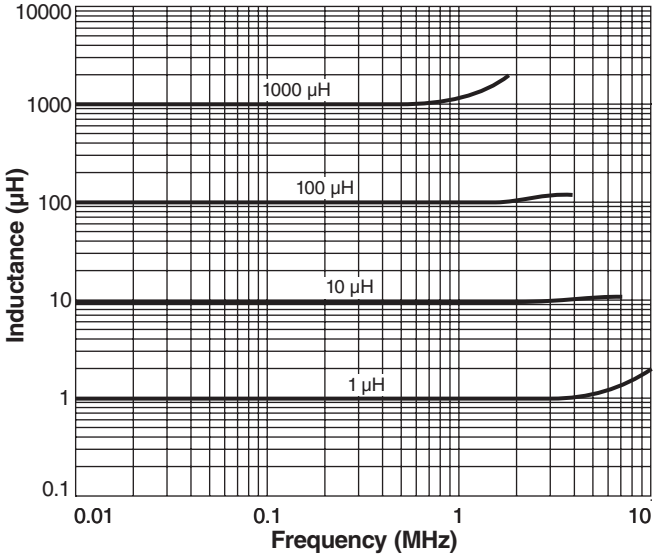

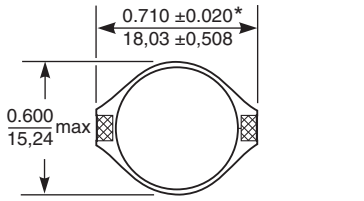

* Allow an additional 0.01/0,254 in length and 0.005/0,127 in height for optional tin-lead and tin-silver-copper application.

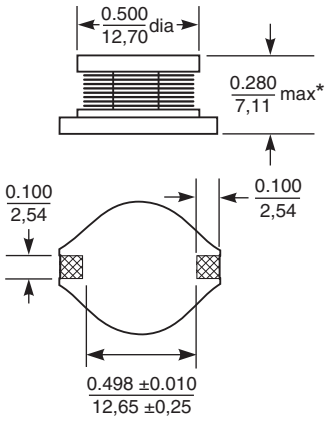

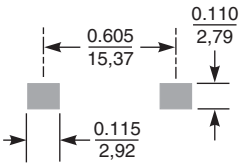

Recommended Land Pattern

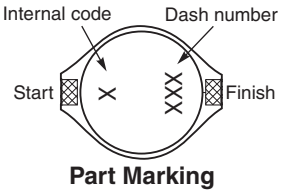

Part Marking

Dimensions are in $\frac{\text{inches}}{\text{mm}}$

©PulseGM Inc. 2019
This product may not be used in medical or high risk applications without prior PulseGM approval.
Specification subject to change without notice.
Please check web site for latestinformation.