SMT Power Inductors – MO5040H



- Heavy gauge wire and self-leaded terminations for low DCR
- Saturation current ratings as high as 33.4 A

Core material Ferrite

Core and winding loss

Terminations RoHS compliant tin-silver (96.5/3.5) over copper. Other terminations available at additional cost.

Weight 5.8 – 7.6 g (2.8 –12 µH); 5.7 – 7.0 g (15 –1400 µH) **Ambient temperature** –40°C to +85°C with Irms current, +85°C to +125°C with derated current

Storage temperature Component: –40°C to +125°C. Tape and reel packaging: –40°C to +80°C

Resistance to soldering heat Max three 40 second reflows at +260°C, parts cooled to room temperature between cycles

Moisture Sensitivity Level (MSL) 1 (unlimited floor life at <30°C / 85% relative humidity)

Failures in Time (FIT) / Mean Time Between Failures (MTBF) 38 per billion hours / 26,315,789 hours, calculated per Telcordia SR-332

PCB washing Tested to MIL-STD-202 Method 215 plus an additional aqueous wash.

Part number[1]	Inductance[2] (µH)	DCR max (mOhms)	SRF[4] typ (MHz)	Isat[4] (A)	Irms[5] (A)
MO5040H-282ML_	2.8±20%	5.2	65	33.4	12.1
MO5040H-392ML_	3.9±20%	6.0	40	26.8	11.2
MO5040H-682ML_	6.8±20%	9.0	30	22.5	9.6
MO5040H-103ML_	10±20%	11	22	17.8	8.6
MO5040H-123ML_	12±20%	13	21	15.9	7.4
MO5040H-153ML_	15±20%	20	18	13.8	6.5
MO5040H-183ML_	18±20%	22	14	13.2	6.0
MO5040H-223ML_	22±20%	24	13	11.8	5.7
MO5040H-333ML_	33±20%	37	10	9.6	4.5
MO5040H-473ML_	47±20%	52	8.0	7.8	3.7
MO5040H-683ML_	68±20%	67	7.0	6.7	3.4
MO5040H-104ML_	100±20%	115	6.0	5.6	2.8
MO5040H-334KL_	330±10%	325	3.0	3.0	1.5
MO5040H-684KL_	680±10%	780	1.6	2.0	1.1
MO5040H-145KL_	1400±10%	1300	1.0	1.5	0.7

1. When ordering, please specify **termination** and **packaging** codes:

MO5040H-104MLD

Termination: **L** = RoHS compliant tin-silver (96.5/3.5) over copper.
Special order:
T = RoHS tin-silver-copper (95.5/4/0.5) or
S = non-RoHS tin-lead (63/37).

Packaging: **D** = 13″ machine-ready reel. EIA-481 embossed plastic tape (175 parts per full reel).
B = Less than full reel. In tape, but not machine ready. To have a leader and trailer added ($25 charge), use code letter C instead.

2. Inductance measured at 100 kHz, 0.1 Vrms, 0 Adc using Pulse SMD-A fixture in Agilent/HP 4284A impedance analyzer.
3. SRF measured using Agilent/HP 8753D network analyzer and Coilcraft SMD-D test fixture.
4. DC current at which the inductance drops 10% (typ) from its value without current.
5. Current that causes a 40°C temperature rise from 25°C ambient.
6. Electrical specifications at 25°C.

Refer to Doc 362 “Soldering Surface Mount Components” before soldering.

PulseGM
www.pulsegm.com

China +86-0755-21055287
Sales@pulsegm.com

©PulseGM Inc. 2019
This product may not be used in medical or high risk applications without prior PulseGM approval.
Specification subject to change without notice.
Please check web site for latestinformation.

SMT Power Inductors - MO5040H Series

Typical L vs Current

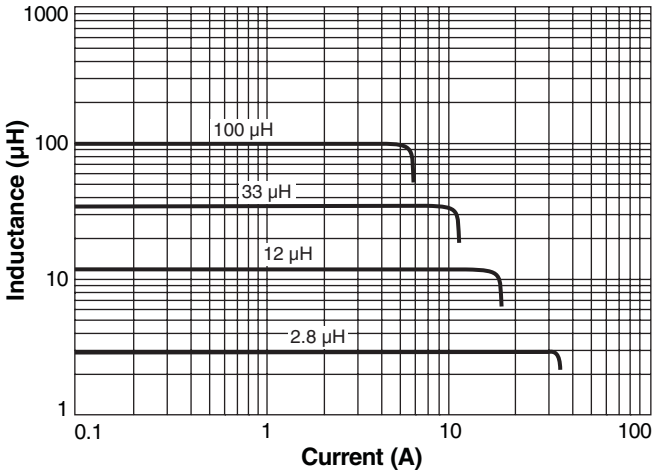

Typical L vs Frequency

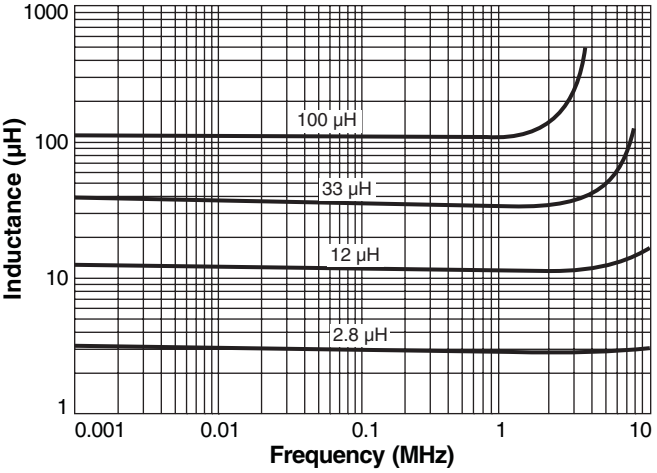

2.8 µH – 12 µH

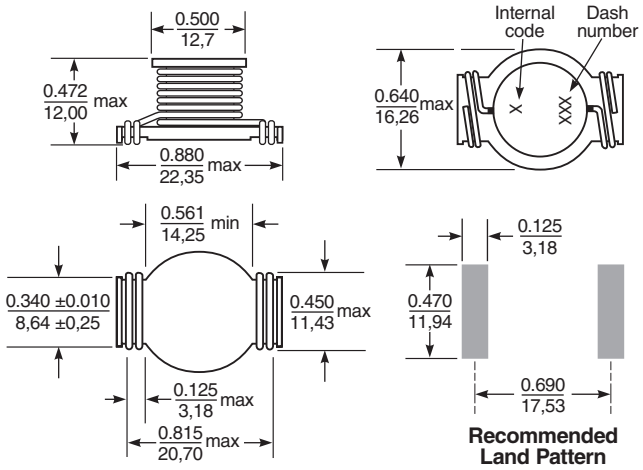

Dash number	Number of wire wraps
-282	2
-392	2
-682	2
-103	2
-123	2

15 µH – 1400 µH

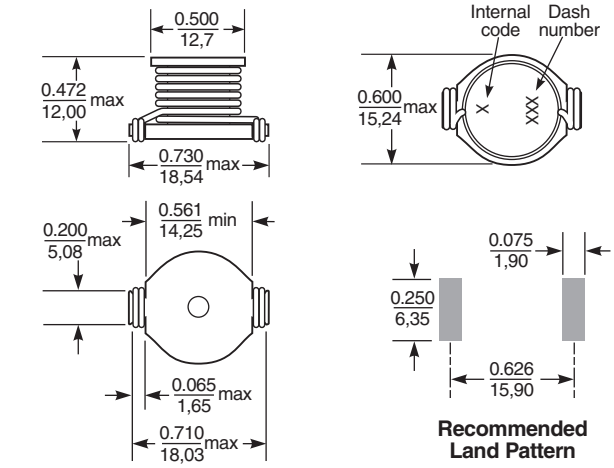

Dash number	Number of wire wraps
-153	1
-183	1
-223	1
-333	1
-473	1
-683	1
-104	1
-334	2
-684	3
-145	4

Dimensions are in inches / mm

Packaging 175 per 13″ reel
2.8 –12 µH parts Plastic tape: 44 mm wide, 0.5 mm thick, 24 mm pocket spacing, 12.8 mm pocket depth
15 –1400 µH parts Plastic tape: 32 mm wide, 0.4 mm thick, 24 mm pocket spacing, 12.1 mm pocket depth

PulseGM
www.pulsegm.com
China +86-0755-21055287
Sales@pulsegm.com

©PulseGM Inc. 2019
This product may not be used in medical or high risk applications without prior PulseGM approval.
Specification subject to change without notice.
Please check web site for latestinformation.