Shielded Power Inductors – LP3015

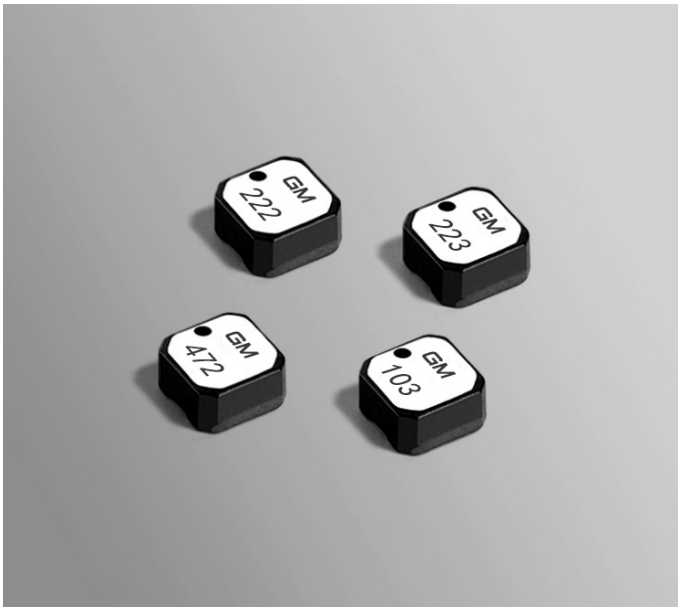

- Very low DCR; excellent current handling
- Miniature 3.0 × 3.0 mm footprint; less than 1.5 mm tall

Core material Ferrite
Core and winding loss
Environmental RoHS compliant, halogen free
Terminations RoHS compliant matte tin over nickel over silver. Other terminations available at additional cost.
Weight 40 – 45 mg
Ambient temperature –40°C to +105°C with (40°C rise) Irms current.
Maximum part temperature +145°C (ambient + temp rise).
Storage temperature Component: –40°C to +145°C. Tape and reel packaging: –40°C to +80°C
Resistance to soldering heat Max three 40 second reflows at +260°C, parts cooled to room temperature between cycles **Moisture Sensitivity Level (MSL)** 1 (unlimited floor life at <30°C / 85% relative humidity)
Failures in Time (FIT) / Mean Time Between Failures (MTBF) 38 per billion hours / 26,315,789 hours, calculated per Telcordia SR-332
Packaging 1000/7″ reel; 3500/13″ reel; Plastic tape: 12 mm wide, 0.26 mm thick, 8 mm pocket spacing, 1.65 mm pocket depth
Recommended pick and place nozzle OD: 3 mm; ID: ≤ 1.5 mm
PCB washing Tested to MIL-STD-202 Method 215 plus an additional aqueous wash.

Part number	Inductance ±20% (µH)	DCR max (Ohms)	SRF typ (MHz)	Isat (A) 10% drop	Isat (A) 20% drop	Isat (A) 30% drop	Irms (A) 20°C rise	Irms (A) 40°C rise
LP3015-102MR_	1.0	0.075	190	1.8	2.0	2.1	1.4	2.0
LP3015-152MR_	1.5	0.100	140	1.8	2.1	2.2	1.3	1.7
LP3015-182MR_	1.8	0.100	135	1.5	1.7	2.1	1.1	1.4
LP3015-222MR_	2.2	0.110	110	2.0	2.0	2.1	1.1	1.4
LP3015-332MR_	3.3	0.130	90	1.4	1.5	1.5	1.0	1.4
LP3015-472MR_	4.7	0.200	79	1.1	1.2	1.2	0.90	1.2
LP3015-682MR_	6.8	0.300	58	0.83	0.86	0.89	0.68	0.90
LP3015-103MR_	10	0.440	48	0.60	0.69	0.73	0.55	0.75
LP3015-153MR_	15	0.700	35	0.58	0.61	0.62	0.44	0.59
LP3015-183MR_	18	0.750	33	0.56	0.58	0.59	0.43	0.58
LP3015-223MR_	22	0.825	30	0.48	0.49	0.50	0.42	0.57
LP3015-333MR_	33	1.30	23	0.39	0.41	0.42	0.35	0.48
LP3015-473MR_	47	1.55	17	0.36	0.38	0.39	0.30	0.40
LP3015-683MR_	68	2.35	14	0.29	0.30	0.31	0.25	0.33
LP3015-104MR_	100	3.40	11	0.24	0.25	0.26	0.19	0.26
LP3015-124MR_	120	4.65	9.0	0.21	0.22	0.22	0.17	0.23
LP3015-154MR_	150	6.25	8.0	0.19	0.20	0.20	0.15	0.20
LP3015-184MR_	180	8.60	7.5	0.16	0.17	0.17	0.13	0.175
LP3015-224MR_	220	9.50	6.0	0.15	0.16	0.16	0.11	0.155
LP3015-334MR_	330	23.0	5.0	0.10	0.11	0.11	0.700	0.095

1. Please specify **termination** and **packaging** codes:

LP3015-333MRC

Termination: **R**= RoHS compliant matte tin over nickel over silver. Special order, added cost: **Q** = RoHS tin-silver-copper (95.5/4/0.5) or **P** = non-RoHS tin-lead (63/37).

Packaging: **C**= 7″ machine-ready reel. EIA-481 embossed plastic tape (1000 parts per full reel).
B= Less than full reel. In tape, but not machine ready. To have a leader and trailer added ($25 charge), use code letter C instead.
D= 13″ machine-ready reel. EIA-481 embossed plastic tape. Factory order only, not stocked (3500 per full reel).

2. Inductance tested at 100 kHz, 0.1 Vrms using an Agilent/HP 4192A. Inductance at 1 MHz is the same for parts with SRF ≥10 MHz.
3. DCR measured on a micro-ohmmeter.
4. SRF measured using Agilent/HP 8753ES or equivalent.
5. DC current at 25°C that causes the specified inductance drop from its value without current. .
6. Current that causes the specified temperature rise from 25°C ambient. This information is for reference only and does not represent absolute maximum rat-ings.
7. Electrical specifications at 25°C.

Refer to Doc 362 “Soldering Surface Mount Components” before soldering.

PulseGM Designer’s Kit C392 contains samples of 0.80 µH to 33 µH parts (3 each) from LP3008, LP3010 and LP3015. **Kit C401** contains samples of 0.56 µH to 33 µH parts (3 each) from LP4012 and LP4018. **Kit C402** contains samples of 220 µH to 3300 µH parts (3 each) from all five series. For details of kit contents and to order, contact PulseGM.

PulseGM
www.pulsegm.com

China +86-0755-21055287
Sales@pulsegm.com

©PulseGM Inc. 2019
This product may not be used in medical or high risk applications without prior PulseGM approval.
Specification subject to change without notice.
Please check web site for latestinformation.

Shielded Power Inductors – LP3015 Series

Typical L vs Frequency

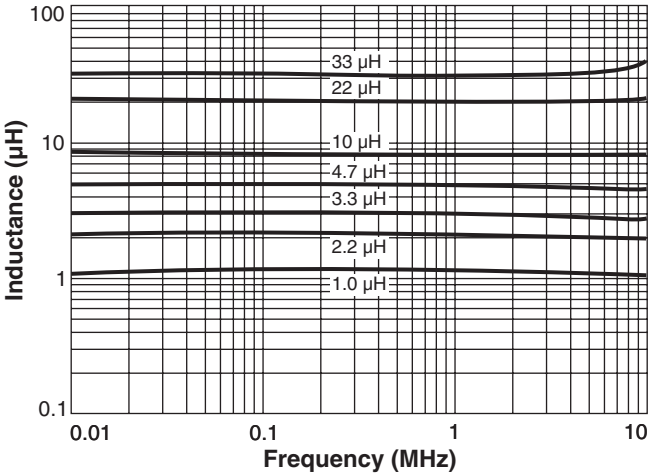

Typical L vs Current

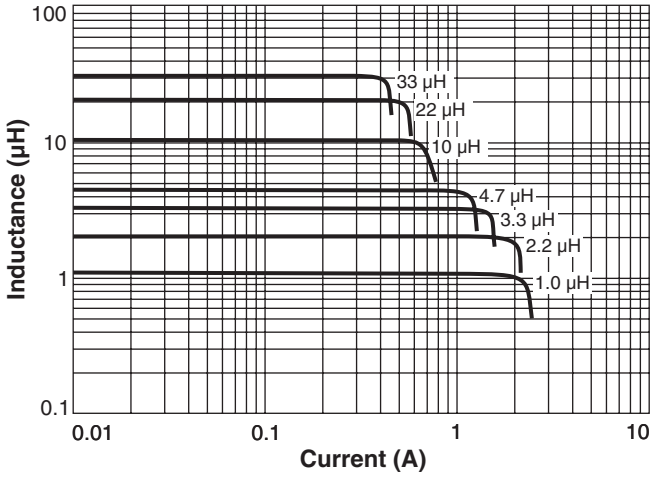

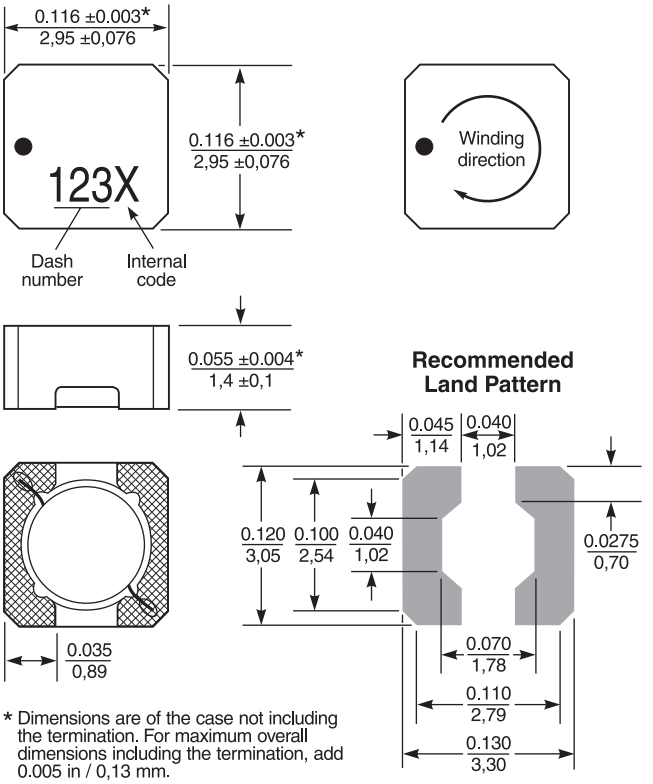

* Dimensions are of the case not including the termination. For maximum overall dimensions including the termination, add 0.005 in / 0,13 mm.
For optional tin-lead and tin-silver-copper terminations, dimensions are for the mounted part. Dimensions before mounting can be an additional 0.005 inch / 0,13 mm).

Dimensions are in inches / mm

Packaging 1000/7″ reel; 3500/13″ reel; Plastic tape: 12 mm wide, 0.26 mm thick, 8 mm pocket spacing, 1.65 mm pocket depth

NOTE NEW PART ORIENTATION Parts are rotated 90° in the packaging tape compared to previous versions of this product.

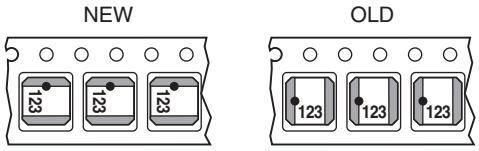

PulseGM
www.pulsegm.com
China +86-0755-21055287
Sales@pulsegm.com

©PulseGM Inc. 2019
This product may not be used in medical or high risk applications without prior PulseGM approval.
Specification subject to change without notice.
Please check web site for latestinformation.