2.4/5GHz 1608 Diplexer: GX1608R24554K80

Applications:

WLAN, 802.11b/g, ISM Band…



Features

SMD, high reliability, ultra Impact…

Part number

GX	1608	R	2455	4K	80
	(1)	(2)	(3)	(4)	(5)

(1)Size Code	1.6x0.8mm
(2) Packing	Tape and reel
(3) Frequency	2.4/5GHz
(4) Packing Number	4K
(5)Type	80

Electrical Specification

DESCRIPTION	VALUE	
Pass Band	LOW Band	High Band
	2400~2500MHz	4900~6000MHz
Insertion Loss	0.7dB (Max) at 25°C	0.8dB (Max) at 25°C
VSWR	2.0(Max)	1.7(Max)
Attenuation	20dB(Min).@4.8~5GHz 20dB(Min).@7.2~7.5GHz	28dB(Min).@860~960MHz 23dB(Min).@1545~1605MHz 23dB(Min).@1710~1990GHz 28dB(Min).@2.17GHz 8dB(Min).@8.1GHz 15dB(Min).@8.82~9.8GHz 27dB(Min).@9.8~11.8GHz
Isolation	Middle Band to High Band: 20dB (Min). @4.9~5.95GHz	
Operating Temperature	-40 ~ +85 °C	

The specification is defined on EVB.

© PulseGM Inc. 2019
This product may not be used in medicalor high risk applications without prior PulseGM approval.
Specification subject to change without notice.
Please check web site for latestinformation.

2.4/5GHz 1608 Diplexer: GX1608R24554K80

Dimension and Terminal Configuration

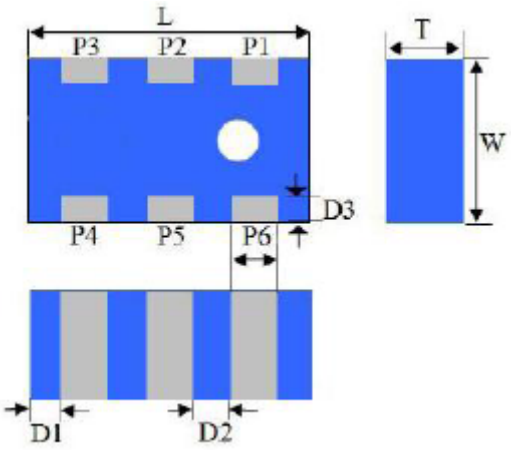

Dimension (mm)	
L (mm)	1.60±0.15
W (mm)	0.80±0.15
T (mm)	0.60±0.15
P1 (mm)	0.20±0.15
P2 (mm)	0.20±0.15
P3 (mm)	0.20±0.15
P4 (mm)	0.20±0.15
P5 (mm)	0.20±0.15
P6 (mm)	0.20±0.15
D1 (mm)	0.20±0.15
D2 (mm)	0.30±0.10
D3 (mm)	0.15±0.10

No.	Terminal Name
P1	Low band port
P2	Ground
P3	High band port
P4	Ground
P5	Common port
P6	Ground

P.S : Symmetrical,

No direction

Evaluation Board Reference

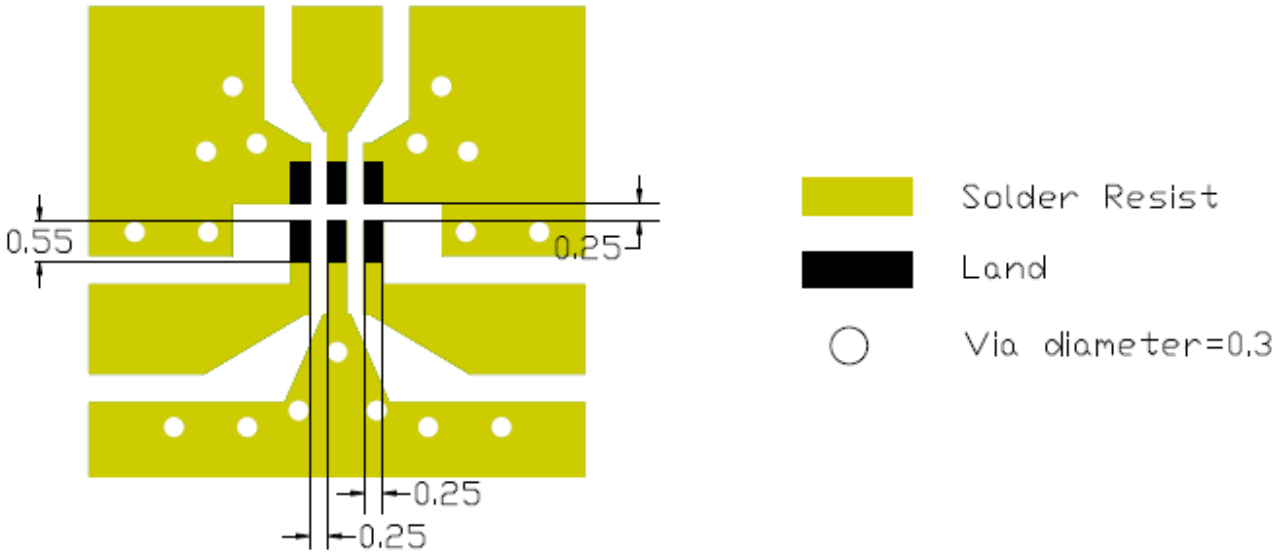

Fig. 2 Reference design of evaluation board

China +86-0755-21055287
Sales@pulsegm.com

© PulseGM Inc. 2019
This product may not be used in medicalor high risk applications without prior PulseGM approval.
Specification subject to change without notice.
Please check web site for latestinformation.

2.4/5GHz 1608 Diplexer: GX1608R24554K80

Electrical Characteristics

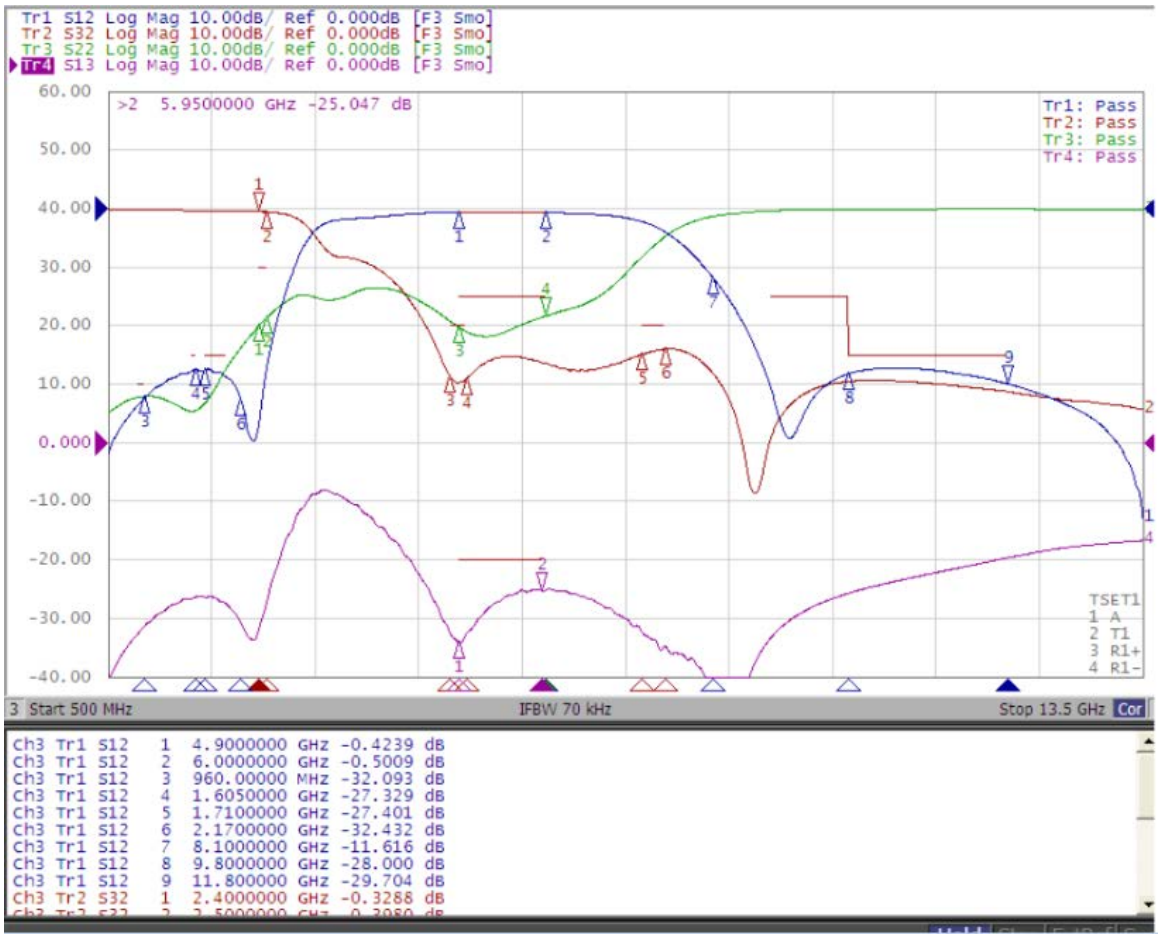

© PulseGM Inc. 2019
This product may not be used in medicalor high risk applications without prior PulseGM approval.
Specification subject to change without notice.
Please check web site for latestinformation.

2.4/5GHz 1608 Diplexer: GX1608R24554K80

Taping Specifications

Reel and Taping Specification

Reel Specification

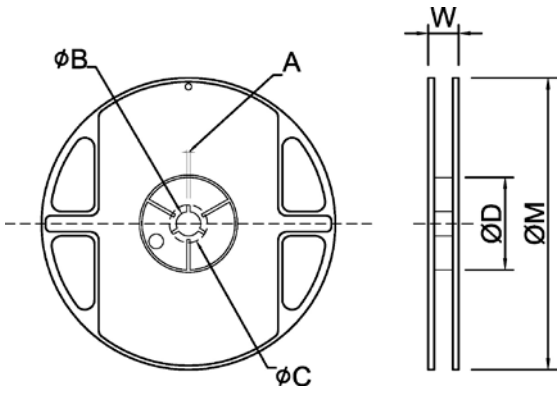

TYPE	SIZE		A	φB	φC	φD	W	φM
1608	7”	4K/Reel	2.0±0.5	13.5±1.0	21±1.0	60±1.0	11.5±2.0	178±2.0

Tapping Specification

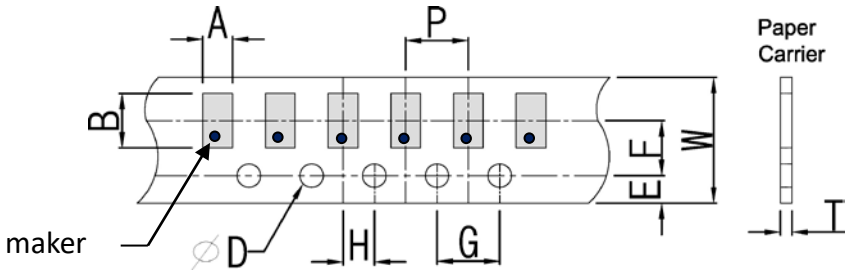

Packaging	Type	A	B	W	E	F	G	H	T	φD	P
Paper Type	1608	1.40±0.20	2.20±0.20	8.0±0.20	1.75±0.10	3.0±0.05	4.0±0.10	2.0±0.05	0.75±0.10	1.50 +0.10 -0	4.0±0.1

© PulseGM Inc. 2019
This product may not be used in medicalor high risk applications without prior PulseGM approval.
Specification subject to change without notice.
Please check web site for latestinformation.

2.4/5GHz 1608 Diplexer: GX1608R24554K80

Recommended Reflow Profile

Pb free solder

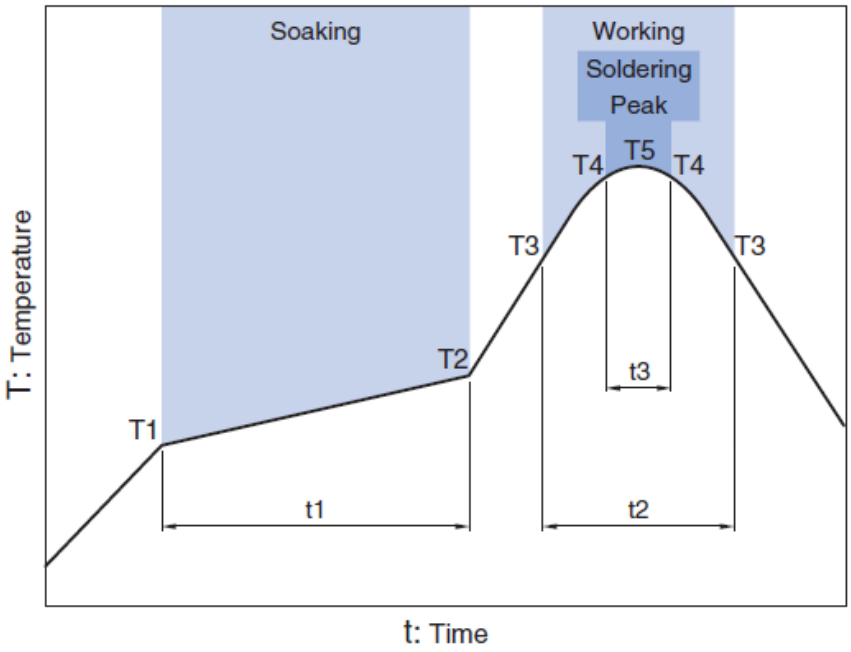

Soaking			Working		Soldering		Peak
Temp.		Time	Temp.	Time	Temp.	Time	Temp.
T1	T2	t1	T3	t2	T4	t3	T5
150°C	180°C	60 to 120sec	230°C	more than 30sec	247 to 253°C	within 10sec	260°C Max.

March 2019 Ver.H01

China +86-0755-21055287
Sales@pulsegm.com

© PulseGM Inc. 2019
This product may not be used in medicalor high risk applications without prior PulseGM approval.
Specification subject to change without notice.
Please check web site for latestinformation.