RFID Transponder Coils – GT0311



The GT0311 series of transponder coils is designed for RFID applications at 125 kHz. It is PulseGM's smallest transponder coil developed specifically for the harshest mechanical environments.

The coil is wound on a plastic base, providing great durability and allowing this part to withstand physical shock. With operating temperature range to 125°C, these parts pass AEC-200 Grade 1 (-40°C to +125°C) qualification and are ideal for use in a wide range of automotive applications. The uniquely shaped termination provides excellent board adhesion.

In addition to our standard models, PulseGM can also design transponder coils to operate at other frequencies.

To request free evaluation samples, contact Pulsegm or visit **www.pulsegm.com**.

Part number[1]	Inductance[2] at 125 kHz ±2% (mH)	Q min[2]	Test Freq (KHz)	Sensitivity[4] (mV/µT)	Matching capacitor[5] (pF)	DCR max[6] (Ohms)	SRF typ[7] (kHz)
GT0311-105XGL_	1.00	40	125	16	4050	25	4000
GT0311-235XGL_	2.36	50	125	30	1621	39	2200
GT0311-495XGL_	4.90	40	125	41	681	96	1300
GT0311-725XGL_	7.20	40	125	52	331	115	1000

1. When ordering, please specify **packaging** code:

GT0311-725XGLD

Packaging: D = 13″ machine-ready reel. EIA-481 embossed plastic tape (2500 parts per full reel).
B = Less than full reel. In tape, but not machine ready. To have a leader and trailer added ($25 charge), use code letter D instead.

2. Inductance and Q measured using Agilent/HP 4192A impedance analyzer at 125 kHz. For recommended test procedures, contact PulseGM.

3. Read distance measured using the KEELOQ® Transponder Evaluation Kit part number DM303005 from Microchip. Distance was recorded as the voltage across the resonant circuit dropped below 10 mV.

4. Sensitivity measured in accordance with Coilcraft application note "Measuring Sensitivity of Transponder Coils."

5. Matching capacitor value required for parallel resonant circuit operating at 125 kHz.

6. DCR measured on micro-ohmmeter.

7. SRF measured using Agilent/HP 8753D network analyzer.

8. Electrical specifications at 25°C

Refer to Doc 362 "Soldering Surface Mount Components" before soldering.

Terminations RoHS compliant gold over nickel over phos bronze.

Weight 210 – 240 mg

Ambient temperature –40°C to +125°C

Storage temperature Component: –40°C to +125°C.
Tape and reel packaging: –40°C to +80°C

Resistance to soldering heat Max three 40 second reflows at +260°C, parts cooled to room temperature between cycles

Moisture Sensitivity Level (MSL) 1 (unlimited floor life at <30°C / 85% relative humidity)

Temperature coefficient of inductance +300 to +1100 ppm/°C

Failures in Time (FIT) / Mean Time Between Failures (MTBF)
One per billion hours / one billion hours, calculated per Telcordia SR-332

Packaging 3000 per 13″ reel Plastic tape: 24 mm wide, 0.3 mm thick, 8 mm pocket spacing, 2.49 mm pocket depth

PCB washing Tested with pure water or alcohol only. For other solvents, see Doc787_PCB_Washing.pdf.

Applications
- Car access systems
  - immobilizer
  - PEPS (Passive Entry, Passive Start)
- TPMS (Tire Pressure Monitoring Systems)

PulseGM
www.pulsegm.com
China +86-0755-21055287
Sales@pulsegm.com

© PulseGM Inc. 2019
This product may not be used in medicalor high risk applications without prior PulseGM approval.
Specification subject to change without notice.
Please check web site for latestinformation.

RFID Transponder Coils – GT0311

RoHS COMPLIANT

AEC Q200 +125°C

Size 11.4 x 3.5 x 2.4 (mm)

SMD

Dimensional drawing and layout recommendation

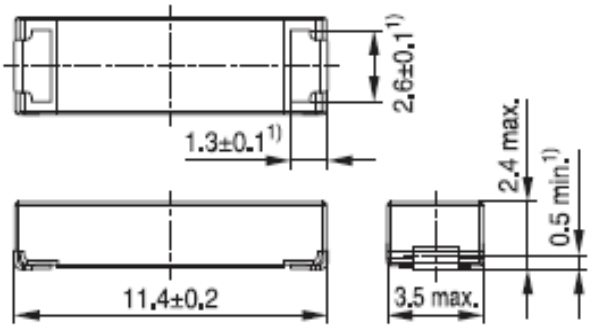

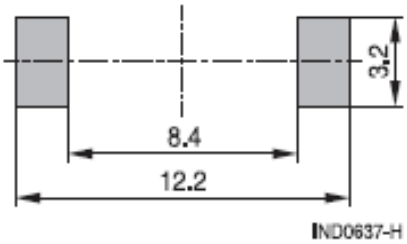

IND0637-H

1) Soldering area

IND0636-Q-E

Dimensions in mm

Taping and packing

Blister tape

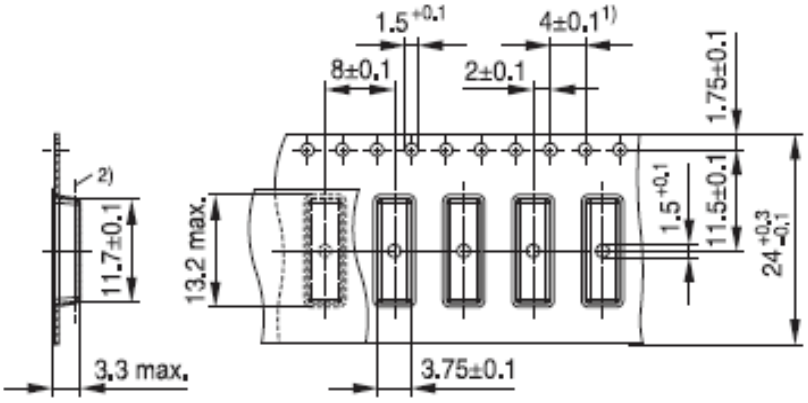

Direction of unreeling

Reel

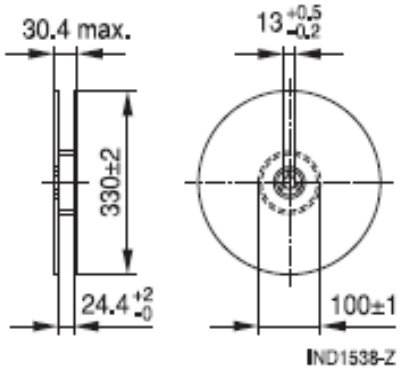

IND1538-Z

1) Limit tolerance over 10 pitches ±0.2
2) Reference plane for the dimensions: 11.7±0.1 and 3.75±0.1

IND1557-E

Dimensions in mm

China +86-0755-21055287
Sales@pulsegm.com

© PulseGM Inc. 2019
This product may not be used in medicalor high risk applications without prior PulseGM approval.
Specification subject to change without notice.
Please check web site for latestinformation.