Installation Operation Maintenance Manual

Air-cooled Chiller Unit

EGCD008FBCxyAz, EGCD007FBCxyAz ,EGCC006FBCxyAz ,

EGCC005FBCxyAz ,EGCA006FBCxyAz, EGCA005FBCxyAz



⚠ WARNING

This appliance is not intended for use by persons (including children) with reduced physical, sensory or mental capabilities, or lack of experience and knowledge, unless they have been given supervision or instruction concerning use of the appliance by a person responsible for their safety. Children should be supervised to ensure that they do not play with the appliance.
Only professionals can install, debug, operate and maintain the equipment. Improper installation, operation and maintenance of the equipment may cause dangers. Improper operation of equipment by unqualified personnel may cause serious equipment damage, personal injury or even death. When operating the equipment, pay attention to all warnings and cautions in the text, as well as warning signs posted on the unit.

If the SUPPLY CORD is damaged, it must be replaced by the manufacturer, its service agent or similarly qualified persons in order to avoid a hazard.

Original instruction

Apr. 2025 PN: 71000001001.A

Contents

Introduction 4

1. Safety Instructions 5

1.1. General Instructions 5
1.2. Safe Use of Refrigerant 7

2. Product Introduction 8

2.1. Model Description 8
2.2. System Principle 9
2.3. Overall Dimensions 10
2.4. Control Logic 11
2.5. Operating Modes 13
2.6. Technical Parameters 14

3. Installation Instructions 22

3.1. Precautions for Installation 22
3.2. Storage 22
3.3. Transportation and Handling 22
3.4. Unit Installation 23

4. Electrical Connection 24

4.1. Power Supply Connection 24
4.2. User-side Wiring 26

5. Unit Commissioning 29

5.1. Vacuuming of the Water System 29
5.2. Coolant Filling 29
5.2.1. Automatic Liquid Replenishment of the Unit 29
5.2.2. Liquid Replenishment with Conventional Tooling 30
5.3. Refrigerant Charging 32
5.3.1. Vacuum Drying 33
5.3.2. Refrigerant Charging 33
5.4. Unit Startup 34

6. Operation Instructions of the Controller 36

6.1. Touch Screen 36
6.2. Home Page Interface 36
6.3. Parameter Interface 38
6.3.1. User Parameter Interface 38

6.3.2. Maintenance Parameter Interface 39
6.3.3. Manufacturer Parameter Interface 40
6.3.4. Clock and Language Interface 40
6.3.5. Network Parameter Interface 41
6.3.6. Password Setting Interface 41
6.4. Curve Interface 41
6.5. Alarm Interface 42
6.6. Operation Interface 53
7. Fault Maintenance 54
7.1. Fan Faults 54
7.2. Refrigeration System Faults 54
7.3. Water System Faults 55
7.4. Inspection and Cleaning of the Condenser 55
7.5. Inspection and Cleaning of the Evaporator 56
7.6. Refrigerant and Lubricating Oil Charging 56
7.7. Routine Maintenance 56
8. Environmental Protection 58
8.1. Names and Contents of Hazardous Substances in the Product 58
8.2. Treatment Before the Unit is Disabled 58
8.3. Recovery Labels 59
8.4. Unit Recovery 59
8.5. Environmental Protection and Safety Warnings 60

Introduction

Please read this manual carefully before carrying out assembly, installation, electrical engineering and maintenance operations, and strictly abide by relevant requirements and operate carefully when performing relevant operations. To ensure the reliable operation of the unit and avoid malfunctions caused by improper operation.

This manual is the property of the customer and is used with the equipment. Please put it back in the technical data bag for safekeeping after installation.

This manual may not fully cover all situations encountered during unit installation. If you require more detailed information please contact the local sales office of Essent. The contents of the manual may change at any time as the equipment improves without notice.

All installation processes of the unit must comply with national and local regulations and be completed by professionals. In this manual, prompts such as " ⚠ Warning" and " ⚠ Caution" will be given in appropriate places. To ensure personal safety and the normal operation of the equipment, please read these contents carefully and follow them strictly. Each item is of great importance.

⚠ **Warning**	If you do not strictly follow the warning content, it may cause serious damage to the chiller unit or result in injury.
⚠ **Caution**	If you do not strictly follow the precautions, it may cause minor or moderate damage to the chiller, property loss, personal injury or environmental pollution. At the same time, the precautions also provide more useful help information, which may be beneficial to the operation of the device or to extend the service life of the device. However, this does not mean that this information is the best choice, nor is it necessarily directly related to improving the performance of the device.
	ISO 7000-1659(2004-01) Service Indicators: Read the technical manual
	ISO 7000-1641(2004-01) Operator's Manual: Operating instructions
	Hazardous Voltage
	Moving parts can cause injury. Keep a proper distance and disconnect power before service.

1. Safety Instructions

1.1. General Instructions

⚠ Warning

- All installation processes of the chiller must comply with national and local regulations.
- When installing the equipment, please consult the local sales department. Professional technicians with a liquid chiller installation qualification certificate are required to install the liquid chiller unit. Users without a liquid chiller installation qualification certificate shall not install, repair, or move the unit by themselves to avoid water leakage, electric shock, or fire.
- Before installation or maintenance, lock the power supply and disconnect switch of the unit in the power - off state to avoid personal injury or death caused by electric shock or contact with moving parts.
- Please set up a dedicated circuit. The voltage supply fluctuation shall not exceed ±10% of the rated voltage. The power cord must be separated from the welding transformer, as the latter can cause large voltage fluctuations.
- Professional electricians with qualification certificates are required to install the equipment strictly in accordance with national electrical standards and the regulations of the local power department, and check whether the line capacity meets the requirements and whether the power cord is loose or damaged.
- The cover plate of the electrical control box must be firmly installed to prevent dust, water, etc. from entering. Electrical components must be protected from moisture and kept away from water sources. Otherwise, accidents such as electric shock and fire may occur.
- Use fuses with the correct rated current. Do not use temporary substitutes such as a wire segment. This may not only damage the unit itself but also cause a fire.
- The power supply of the unit and the power supply for electric auxiliary heating must be equipped with a leakage protection device and must be connected to a grounding wire. Otherwise, without protection, injury or even casualty accidents may occur.
- The specifications of the power cord should meet the requirements. Otherwise, circuit safety accidents may occur.
- All electric auxiliary heating must be wired according to the wiring diagram. Directly powering the electric auxiliary heating will cause some control functions of the unit to fail, and the unit will lose power - off control and protection, which will lead to serious consequences.

- Please operate strictly in accordance with the wiring diagram in this manual. Incorrect wiring or human - induced wiring changes will lead to unit failures, damage, or personal safety hazards.
- When cleaning the machine, do not spray water directly onto the machine. This may cause a short - circuit or even electric shock.
- Before touching electrical equipment, all power supplies must be cut off.
- Before maintenance, please confirm that the unit has been powered off to prevent electric shock.
- Maintenance should only be carried out by professional maintenance personnel. When maintenance or repair is required, please contact the sales staff of Essent. Improper maintenance and repair may lead to water leakage, electric shock or fire.
- In case of installation options, please have professionals perform the installation and be sure to use the options specified by our company. Improper installation may lead to coolant leakage, electric shock, and fire.
- Do not use unqualified refrigerants, refrigerant substitutes, or refrigerant additives. Incorrect use or the use of unqualified refrigerants, refrigerant substitutes, or refrigerant additives may cause equipment damage and various potential safety risks. Please purchase qualified refrigerants. All technicians operating refrigerants must hold qualification certificates, be familiar with, and strictly abide by the relevant technical requirements, laws, and regulations regarding the use, handling, recovery, and reuse of refrigerants.
- When a refrigerant leak occurs, the use of open flames is strictly prohibited. If the chiller fails to cool or heat properly, there may be a refrigerant leak. In such a case, please contact the sales department of Essent.



Recycling

- Please do not dispose of electrical appliances as unsorted municipal waste. Instead, use specialized recycling facilities.
- Please contact your local government to obtain information about available recycling systems.
- If electrical appliances are discarded in landfills or waste sites, harmful substances may seep into the groundwater and enter the food chain, harming your health.

- When replacing an old electrical appliance with a new one, retailers are legally obliged to recycle your old appliance free of charge.

1.2. Safe Use of Refrigerant

⚠ Warning

- Failure to strictly comply with these instructions may cause serious damage to the chiller unit or result in injury or fatality.
- The unit must be installed in an outdoor area with good ventilation, and the ventilation openings must not be blocked.
- All necessary signs must be maintained. Employers should ensure that employees receive appropriate and adequate instruction and training to understand the meaning of the corresponding safety signs and the actions to be taken in relation to these signs.
- When disposing of equipment that uses refrigerant, local laws must be followed.
- The equipment is charged with refrigerant at the factory. If refrigerant recharge is required for servicing, it should be carried out by professionals in accordance with the instructions on the nameplate.
- If welding is required for servicing, the refrigerant around the unit must be removed first.
- All service personnel and other workers in the area should be informed of the nature of the work being carried out. Working in an enclosed space should be avoided.
- Before and during the work, the area should be inspected with an appropriate refrigerant detector to ensure that technicians are aware of potentially toxic or flammable gases. Ensure that the leak - detection equipment used is suitable for all applicable refrigerants, i.e., spark - free, adequately sealed, or intrinsically safe, and that the leak - detection equipment can detect refrigerants of the corresponding specifications.
- If hot work is to be carried out on refrigeration equipment or any related components, appropriate fire - fighting equipment should be readily available. Place dry - powder or carbon - dioxide fire extinguishers next to the charging area.
- Before opening the system or performing any hot work, ensure that the area is open or well - ventilated. During the work, a certain degree of ventilation should be maintained. The ventilation should safely disperse any released refrigerant and preferably exhaust it to the outside atmosphere.

2. Product Introduction

2.1. Model Description

****	***	F	B	C	x	y	A	z
1~4	5~7	8	9	10	11	12	13	14

Naming rules：

Digit Number	Meaning	Caution
1~4	Product Series	EGCD: represents the series of dual - circuit air - cooled chiller (with free cooling). EGCA: represents the series of single-circuit air-cooled chiller . EGCC: represents a single loop chiller with freeing cold air cooling system.
5~7	Rated Cooling Capacity	005: represents the rated cooling capacity is 5 kilowatts 006: represents the rated cooling capacity is 6 kilowatts 007: represents the rated cooling capacity is 6.5 kilowatts 008: represents the rated cooling capacity is 8 kilowatts
8	Power Supply Type	F: represents 480 volts, 60 hertz, three - phase;
9	Structural Form	B: represents the horizontal structure;
10	Refrigerant	C: represents the R513A refrigerant.
11	Optional Configuration	A: represents the configuration of only electric heating; B: represents the configuration of only automatic liquid replenishment; C: represents the configuration of both electric heating and automatic liquid replenishment; N represents no special options.
12	Corrosion Protection Level	A: represents the C3 anti-corrosion level; B: represents the C4 anti-corrosion level; C: represents the C5 anti-corrosion level.
13	Maintenance Sequence	A: represents the first edition;
14	Design Sequence	A: represents the first edition; B-Z: Indicates a change in the position of the unit's water inlet

2.2. System Principle

The system schematic diagrams of EGCD008FBCxyAz/ EGCD007FBCxyAz /EGCA006FBCxyBz /EGCA005FBCxyBz / EGCA006FBCxyAz /EGCA005FBCxyAz are as follows:

Model	Figure 2-1 Part A&B	Figure 2-1 Part C	Figure 2-1 Part E	Figure 2-1 Part D&F&G&H
EGCD008FBCxyAz	Contain	(x=N,A,B or C) N: No PartC&E; A: Only Part E; B: Only Part C; C: Part C&E		Contain
EGCD007FBCxyAz				
EGCC006FBCxyAz				Do not contain
EGCC005FBCxyAz				
EGCA006FBCxyAz	Do not contain			
EGCA005FBCxyAz				

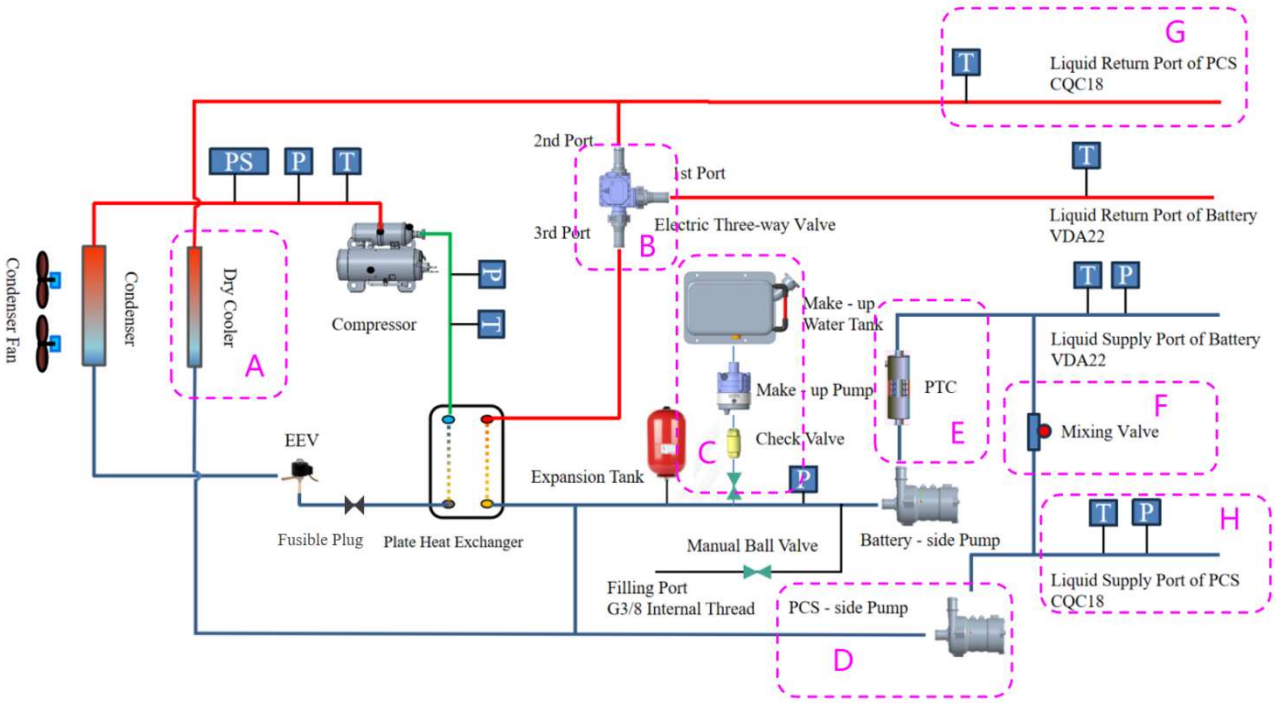

A: Free cold plate exchange B: Three-way valve C: Automatic fluid replacement part D: PCS side water pump

E:PTC heater F: Mixing valve G&H: PCS side piping and sensors

Figure 2-1 System Schematic Diagram

Brief description of the model:

1. EGCD008FBCxyAz (x=B) is same as EGCD008FBCxyAz (x=C) except that PTC heater together with AC contactor and relevant wiring are removed.
2. EGCD008FBCxyAz (x=A) is same as EGCD008FBCxyAz (x=C) except that make-up pump and relevant wiring are

removed.

3. EGCD008FBCxyAz (x=N) is same as EGCD008FBCxyAz (x=B) except that make-up pump and relevant wiring are removed.
4. EGCD007FBCxyAz is same as EGCD008FBCxyAz except the cooling performance parameters and maximum work frequency of compressor are decreased.
5. EGCC006FBCxyAz is same as EGCD007FBCxyAz except the cooling performance parameters are decreased and the coolant loop marked with for PCS is removed.
6. EGCC005FBCxyAz is same as EGCC006FBCxyAz except the cooling performance parameters and maximum work frequency of compressor are decreased.
7. EGCA005FBCxyAz and EGCA006FBCxyAz are same as EGCC005FBCxyAz and EGCC006FBCxyAz respectively except natural cooling mode is removed.

2.3. Overall Dimensions

The overall dimensions and external interface dimensions of the EGCD008FBCCCAA are shown in the figure below:

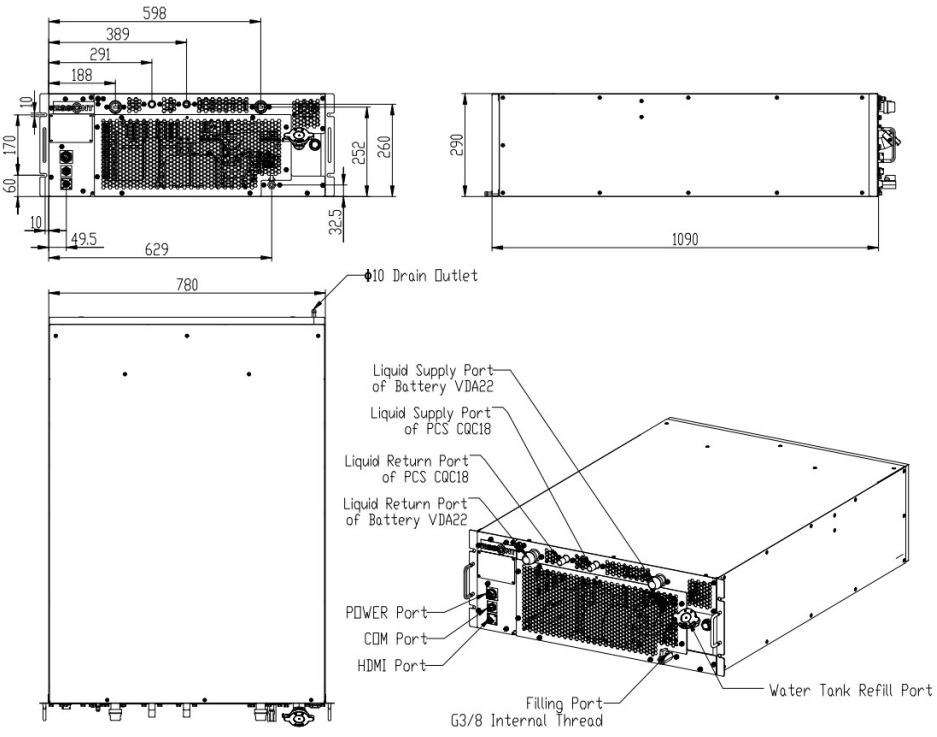

Figure 2-2 Overall Dimension Diagram

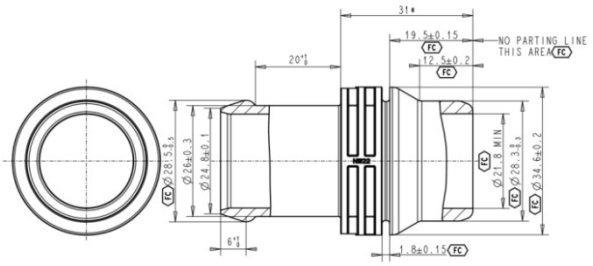

Figure 2-3 Dimensions of NW22

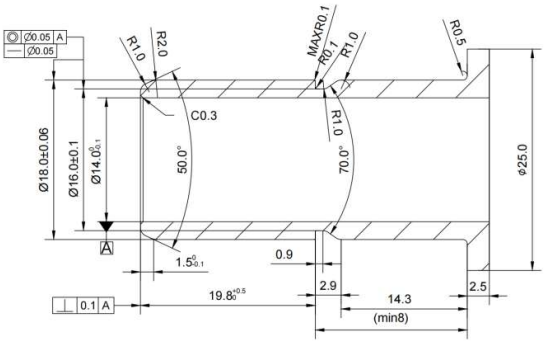

Figure 2-4 Dimensions of CQC18

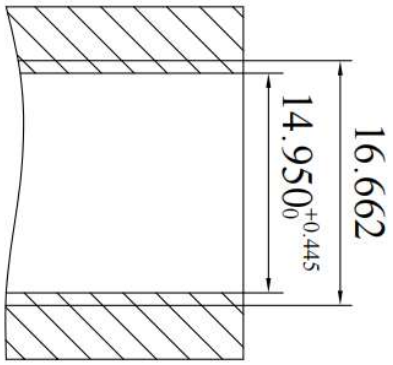

Figure 2-5 Dimensions of G3/8 internal thread

Other units reported may have differences in the quantity and location of incoming and outgoing water.

2.4. Control Logic

The control logic of the EGCD series, EGCC series and EGCA series air-cooled chillers are shown in Table 2-1.。

Table 2-1 Control Logic

Item	Control Logic	Details
Cooling	Turn on the cooling function when the supply liquid temperature is greater than or equal to the sum of the cooling set - point and the cooling start differential.	（1）When the cooling set point is 18°C and the cooling start differential is 2°C, the cooling start point is 20°C (18°C + 2°C = 20°C). (2) When the cooling set point is 18°C and the cooling stop differential is 1°C, the cooling stop point is 17°C (18°C - 1°C = 17°C).

<table>
<tr><th>Item</th><th>Control Logic</th><th>Details</th></tr>
<tr><td></td><td>Turn off the cooling function when the supply liquid temperature is less than or equal to the difference between the cooling set point and the cooling stop differential.</td><td>➢ The unit uses the outlet water temperature as the actual control temperature by default at the factory:
• When the supply liquid temperature is greater than or equal to 20°C, the unit starts the cooling operation.
• When the supply liquid temperature is less than or equal to 17°C, the unit stops the cooling operation.
➢ When using the return water temperature as the actual control temperature:
• When the return liquid temperature is greater than or equal to 20°C, the unit starts the cooling operation.
• When the return liquid temperature is less than or equal to 17°C, the unit stops the cooling operation.</td></tr>
<tr><td rowspan="2">Heating（For the functional part containing E in Figure 2-1）</td><td>Turn on the heating function when the supply liquid temperature is less than or equal to the difference between the heating set - point and the heating start differential.</td><td rowspan="2">（1）When the heating set point is 10°C and the heating start differential is 5°C, the heating start point is 5°C (10°C - 5°C = 5°C).
（2）When the heating set point is 10°C and the heating stop differential is 2°C, the heating stop point is 12°C (10°C + 2°C = 12°C).
➢ The unit uses the outlet water temperature as the actual control temperature by default at the factory:
• When the supply liquid temperature is less than or equal to 5°C, the unit starts the heating operation.；
• When the supply liquid temperature is greater than or equal to 12°C, the unit stops the heating operation.
➢ When using the return water temperature as the actual control temperature:
• When the return liquid temperature is less than or equal to 5°C, the unit starts the heating operation.
• When the return liquid temperature is greater than or equal to 12°C, the unit stops the heating operation.</td></tr>
<tr><td>Turn off the heating function when the supply liquid temperature is greater than or equal to the sum of the heating set - point and the heating stop differential.</td></tr>
<tr><td>Automatic（For the functional part containing E in Figure 2-1）</td><td>Refer to the logic of cooling and heating.</td><td>The difference between the cooling set point and the cooling stop differential needs to be greater than the sum of the heating set point and the heating stop differential plus 1.</td></tr>
</table>

2.5. Operating Modes

The operating modes supported by the EGCD series , EGCC series and EGCA series air-cooled chillers are shown in Table 2-2.

It should be noted that for Figure 2-1, if the PTC heater part is not included, then the heating parts included in the following functional description are not included. The specific unit can refer to the x-digit in the model name (x=N or B indicates no heating function, x=A or C indicates heating function).

Table 2-2 Operating Modes

Operating Mode	Details
Stop	When the chiller is in the stop mode, except for the electronic control part which keeps running, other components such as the water pumps do not operate.
Automatic	In the fully automatic mode, the chiller automatically enters operating modes such as cooling, heating, and self - circulation according to actual needs.
Cooling	• When there is a cooling demand, the cooling function is turned on. The internal circulation water pump, compressor, and fan are all in operation. Both the battery - side water pump and the PCS - side water pump run at the rated speed. • When there is no cooling demand, the compressor is turned off and the fan stops running. The battery - side water pump and the PCS - side water pump run at a low speed. • When there is a heating demand, only the battery - side water pump and the PCS - side water pump are turned on. The water pumps run at a low speed, and other components such as the electric heater do not operate.
Heating	• When there is a heating demand, the heating function is turned on. The internal circulation water pump and the electric heater are in operation, and the internal circulation water pump runs at a high speed. • When there is no heating demand, the electric heater is turned off. The battery - side water pump and the PCS - side water pump run at a low speed. • When there is a cooling demand, only the battery - side water pump and the PCS - side water pump are turned on. The water pumps run at a low speed, and other components such as the compressor do not operate.
Self - circulation	When the chiller operates in the self - circulation mode, only the battery - side water pump and the PCS - side water pump run. The water pumps run at a low speed, and other components do not operate.

2.6. Technical Parameters

The technical parameters of the EGCD series, EGCD series and EGCA series air-cooled chillers are shown in Table 2-3.

Table 2-3 Summary of Technical Parameters

Item		Unit	Details
Product Model		-	EGCD008FBCCxyAz
Dimensions Specification	Overall Dimensions	mm	780W*290H*1090D
	Net Weight (x=N/A/B/C)	kg	112.7/114.1/115.1/116.5
	Size of Inlet/Outlet Ports on Battery Side	mm	VDA22
	Size of Inlet/Outlet Ports on PCS Side	mm	CQC18
	Size of Water Make-up Port	-	G3/8 Internal Thread
	Installation Method	-	Horizontal Installation on Both Sides
Cooling & Heating Performance	Rated Cooling Capacity	kW	Battery side: 5.0 PCS side: 3.0
	Rated Cooling Power	kW	4.1@W18L45 2.6@W18L35
	Rated Heating Capacity(x=A or C)	kW	2.0@W10L - 30
	Rated Heating Power(x=A or C)	kW	2.3@W10L - 30
	Rated Natural Cooling Capacity	kW	4.0@W45L35
	Rated Natural Cooling Power	kW	0.6@W45L35
	Low - temperature Natural Cooling Capacity	kW	8.0@W18L5
	Low - temperature Natural Cooling Power	kW	1.0@W18L5
	Refrigerant/Charge	-	R513A/900g
	Applicable Cooling Medium	kW	≤50% Ethylene Glycol Solution
	Liquid Temperature Setting Range	℃	10 - 30
	Liquid Temperature Control Accuracy	℃	±0.5
Power and Flow	Water Pump Power	W	Battery side: 300 PCS side: 300
	Rated Flow Rate	L/min	Battery side: 35@80kPa PCS side: 23@80kPa

Item		Unit	Details
	Fan Power	W	200*3
	Rated Air Volume	m^3/h	1100*3
Power Supply and Communication	Rated Power Supply	-	480V/60Hz/3~PE
	Power Supply Range	-	480VAC±10%
	Rated Current for Cooling/Heating:	A	5.1/2.7
	Maximum Operating Current	A	7.4
	Communication Protocol	-	RS485
Environmental Reliability	Working Temperature Range	℃	- 30 - 55
	Storage Temperature Range	℃	- 40 - 70
	Protection Level	-	IPX5
	Noise	dB(A)	≤75
	Altitude	m	0 - 4000 (Derating required when exceeding 1000m)
Appearance Color	Color	-	RAL7035
	Shell Surface Treatment	-	Surface Electrostatic Spraying

Item		Unit	Details
Product Model		-	EGCD007FBCCxyAz
Dimensions Specification	Overall Dimensions	mm	780W*290H*1090D
	Net Weight (x=N/A/B/C)	kg	112.7/114.1/115.1/116.5
	Size of Inlet/Outlet Ports on Battery Side	mm	VDA22
	Size of Inlet/Outlet Ports on PCS Side	mm	CQC18
	Size of Water Make-up Port	-	G3/8 Internal Thread
	Installation Method	-	Horizontal Installation on Both Sides
Cooling & Heating Performance	Rated Cooling Capacity	kW	Battery side: 3.0 PCS side: 3.5
	Rated Cooling Power	kW	3.3@W18L45 2.1@W18L35
	Rated Heating Capacity(x=A or C)	kW	2.0@W10L - 30

Item		Unit	Details
	Rated Heating Power(x=A or C)	kW	2.3@W10L - 30
	Rated Natural Cooling Capacity	kW	4.0@W45L35
	Rated Natural Cooling Power	kW	0.6@W45L35
	Low - temperature Natural Cooling Capacity	kW	8.0@W18L5
	Low - temperature Natural Cooling Power	kW	1.0@W18L5
	Refrigerant/Charge	-	R513A/900g
	Applicable Cooling Medium	kW	≤50% Ethylene Glycol Solution
	Liquid Temperature Setting Range	℃	10 - 30
	Liquid Temperature Control Accuracy	℃	±0.5
Power and Flow	Water Pump Power	W	Battery side: 300 PCS side: 300
	Rated Flow Rate	L/min	Battery side: 35@80kPa PCS side: 23@80kPa
	Fan Power	W	200*3
	Rated Air Volume	m³/h	1100*3
Power Supply and Communication	Rated Power Supply	-	480V/60Hz/3~PE
	Power Supply Range	-	480VAC±10%
	Rated Current for Cooling/Heating:	A	4.1/2.7
	Maximum Operating Current	A	7.4
	Communication Protocol	-	RS485
Environmental Reliability	Working Temperature Range	℃	- 30 - 55
	Storage Temperature Range	℃	- 40 - 70
	Protection Level	-	IPX5
	Noise	dB(A)	≤75
	Altitude	m	0 - 4000 (Derating required when exceeding 1000m)
Appearance Color	Color	-	RAL7035
	Shell Surface Treatment	-	Surface Electrostatic Spraying

Item		Unit	Details
Product Model		-	EGCC005FBCCxyAz
Dimensions Specification	Overall Dimensions	mm	780W*290H*1090D
	Net Weight (x=N/A/B/C)	kg	108.9/110.3/111.3/112.7
	Size of Inlet/Outlet Ports on Battery Side	mm	VDA22
	Size of Water Make-up Port	-	G3/8 Internal Thread
	Installation Method	-	Horizontal Installation on Both Sides
Cooling & Heating Performance	Rated Cooling Capacity	kW	5
	Rated Cooling Power	kW	2.5@W18L45 1.5@W18L35
	Rated Heating Capacity(x=A or C)	kW	2.0@W10L - 30
	Rated Heating Power(x=A or C)	kW	2.3@W10L - 30
	Low - temperature Natural Cooling Capacity	kW	5.0@W18L5
	Low - temperature Natural Cooling Power	kW	0.6@W18L5
	Refrigerant/Charge	-	R513A/900g
	Applicable Cooling Medium	kW	≤50% Ethylene Glycol Solution
	Liquid Temperature Setting Range	℃	10 - 30
	Liquid Temperature Control Accuracy	℃	±0.5
Power and Flow	Water Pump Power	W	300
	Rated Flow Rate	L/min	35@80kPa
	Fan Power	W	200*3
	Rated Air Volume	m^3/h	1100*3
Power Supply and Communication	Rated Power Supply	-	480V/60Hz/3~PE
	Power Supply Range	-	480VAC±10%
	Rated Current for Cooling/Heating:	A	3.1/2.7
	Maximum Operating Current	A	7.4
	Communication Protocol	-	RS485
Environmental Reliability	Working Temperature Range	℃	- 30 - 55
	Storage Temperature Range	℃	- 40 - 70

Item		Unit	Details
	Protection Level	-	IPX5
	Noise	dB(A)	≤75
	Altitude	m	0 - 4000 (Derating required when exceeding 1000m)
Appearance Color	Color	-	RAL7035
	Shell Surface Treatment	-	Surface Electrostatic Spraying

Item		Unit	Details
Product Model		-	EGCC006FBCCxyAz
Dimensions Specification	Overall Dimensions	mm	780W*290H*1090D
	Net Weight (x=N/A/B/C)	kg	108.9/110.3/111.3/112.7
	Size of Inlet/Outlet Ports on Battery Side	mm	VDA22
	Size of Water Make-up Port	-	G3/8 Internal Thread
	Installation Method	-	Horizontal Installation on Both Sides
Cooling & Heating Performance	Rated Cooling Capacity	kW	6
	Rated Cooling Power	kW	3.0@W18L45 1.8@W18L35
	Rated Heating Capacity(x=A or C)	kW	2.0@W10L - 30
	Rated Heating Power(x=A or C)	kW	2.3@W10L - 30
	Low - temperature Natural Cooling Capacity	kW	6.0@W18L5
	Low - temperature Natural Cooling Power	kW	0.8@W18L5
	Refrigerant/Charge	-	R513A/900g
	Applicable Cooling Medium	kW	≤50% Ethylene Glycol Solution
	Liquid Temperature Setting Range	℃	10 - 30
	Liquid Temperature Control Accuracy	℃	±0.5
Power and Flow	Water Pump Power	W	300
	Rated Flow Rate	L/min	35@80kPa
	Fan Power	W	200*3

Item		Unit	Details
	Rated Air Volume	m^3/h	1100*3
Power Supply and Communication	Rated Power Supply	-	480V/60Hz/3~PE
	Power Supply Range	-	480VAC±10%
	Rated Current for Cooling/Heating:	A	3.7/2.7
	Maximum Operating Current	A	7.4
	Communication Protocol	-	RS485
Environmental Reliability	Working Temperature Range	℃	- 30 - 55
	Storage Temperature Range	℃	- 40 - 70
	Protection Level	-	IPX5
	Noise	dB(A)	≤75
	Altitude	m	0 - 4000 (Derating required when exceeding 1000m)
Appearance Color	Color	-	RAL7035
	Shell Surface Treatment	-	Surface Electrostatic Spraying

Item		Unit	Details
Product Model		-	EGCA005FBCCxyAz
Dimensions Specification	Overall Dimensions	mm	780W*290H*1090D
	Net Weight (x=N/A/B/C)	kg	104.1/105.5/106.5/107.9
	Size of Inlet/Outlet Ports on Battery Side	mm	VDA22
	Size of Water Make-up Port	-	G3/8 Internal Thread
	Installation Method	-	Horizontal Installation on Both Sides
Cooling & Heating Performance	Rated Cooling Capacity	kW	5
	Rated Cooling Power	kW	2.5@W18L45 2.1@W18L35
	Rated Heating Capacity(x=A or C)	kW	2.0@W10L - 30
	Rated Heating Power(x=A or C)	kW	2.3@W10L - 30
	Refrigerant/Charge	-	R513A/900g

Item		Unit	Details
	Applicable Cooling Medium	kW	≤50% Ethylene Glycol Solution
	Liquid Temperature Setting Range	℃	10 - 30
	Liquid Temperature Control Accuracy	℃	±0.5
Power and Flow	Water Pump Power	W	300
	Rated Flow Rate	L/min	35@80kPa
	Fan Power	W	200*3
	Rated Air Volume	m³/h	1100*3
Power Supply and Communication	Rated Power Supply	-	480V/60Hz/3~PE
	Power Supply Range	-	480VAC±10%
	Rated Current for Cooling/Heating:	A	3.1/2.7
	Maximum Operating Current	A	7.4
	Communication Protocol	-	RS485
Environmental Reliability	Working Temperature Range	℃	- 30 - 55
	Storage Temperature Range	℃	- 40 - 70
	Protection Level	-	IPX5
	Noise	dB(A)	≤75
	Altitude	m	0 - 4000 (Derating required when exceeding 1000m)
Appearance Color	Color	-	RAL7035
	Shell Surface Treatment	-	Surface Electrostatic Spraying

Item		Unit	Details
Product Model		-	EGCA006FBCCxyAz
Dimensions Specification	Overall Dimensions	mm	780W*290H*1090D
	Net Weight (x=N/A/B/C)	kg	104.1/105.5/106.5/107.9
	Size of Inlet/Outlet Ports on Battery Side	mm	VDA22
	Size of Water Make-up Port	-	G3/8 Internal Thread

Item		Unit	Details
	Installation Method	-	Horizontal Installation on Both Sides
Cooling & Heating Performance	Rated Cooling Capacity	kW	6
	Rated Cooling Power	kW	3.0@W18L45 2.6@W18L35
	Rated Heating Capacity(x=A or C)	kW	2.0@W10L - 30
	Rated Heating Power(x=A or C)	kW	2.3@W10L - 30
	Refrigerant/Charge	-	R513A/900g
	Applicable Cooling Medium	kW	≤50% Ethylene Glycol Solution
	Liquid Temperature Setting Range	℃	10 - 30
	Liquid Temperature Control Accuracy	℃	±0.5
Power and Flow	Water Pump Power	W	300
	Rated Flow Rate	L/min	35@80kPa
	Fan Power	W	200*3
	Rated Air Volume	m^3/h	1100*3
Power Supply and Communication	Rated Power Supply	-	480V/60Hz/3~PE
	Power Supply Range	-	480VAC±10%
	Rated Current for Cooling/Heating:	A	3.7/2.7
	Maximum Operating Current	A	7.4
	Communication Protocol	-	RS485
Environmental Reliability	Working Temperature Range	℃	- 30 - 55
	Storage Temperature Range	℃	- 40 - 70
	Protection Level	-	IPX5
	Noise	dB(A)	≤75
	Altitude	m	0 - 4000 (Derating required when exceeding 1000m)
Appearance Color	Color	-	RAL7035
	Shell Surface Treatment	-	Surface Electrostatic Spraying

3. Installation Instructions

3.1. Precautions for Installation

1) Check whether the nameplate of the unit is consistent with the model specified in the order.
2) Check whether all the accompanying documents of the unit are complete.
3) Check whether the accompanying accessories of the unit are in accordance with the items listed in the packing list.
4) Check whether the unit is damaged during transportation. If the unit is obviously damaged, it should be noted on the transportation documents of the transportation company, and the transportation agent should be requested to conduct an inspection and put forward handling suggestions.

3.2. Storage

1) The temperature range of the storage environment: -40~70 °C.
2) The humidity range of the storage environment: at least 5~85% relative humidity.
3) The unit must be kept upright during storage. It is strictly prohibited to place the unit upside down or horizontally.
4) The electrical appliances should be stored in a room without a continuously operating ignition source (for example: open fire or operating gas equipment, etc.).

3.3. Transportation and Handling

⚠ Caution

- This is a fragile item. Please handle it with care and place it gently.
- The inclination during handling shall not exceed 15° (Do not place the product on its side, and do not invert the unit).
- Please protect the water inlet and outlet connectors, as well as the drainage and water make-up connectors during handling and installation.
- The plastic bags should be properly disposed of, and do not let children play with them.
- When using a forklift for handling: Be careful when inserting into the forklift slots at the bottom to prevent the forklift from damaging the machine or the chassis.
- When using a crane for handling: Tighten the lifting ropes and pay attention to maintaining the center of gravity of the chiller when lifting it.

- It is necessary to use two lifting ropes with a length of more than 10 meters and a diameter of about 20 millimeters, which can bear the weight of the machine. Do not use the product straps for handling.
- After removing the wooden frame, please use cardboard or cloth for protection between the lifting ropes and the unit to prevent damage to the machine body.

1) Please use a forklift, crane or hoist with an appropriate tonnage to transport the unit to the installation location.
2) During the handling process, the machine should be kept horizontal to prevent damage to the unit caused by rough operation. When handling, move the unit slowly. Do not put your hands into the grille to avoid causing harm to the machine or people. Before installation, select suitable fixing bolts and handling tools according to the weight of the unit. For the detailed weight of the unit, please refer to the parameter table in Section 2.6.
3) Each chiller has been strictly inspected and tested before delivery. Great care must be taken during transportation and handling to avoid damaging the control system and pipeline components.
4) When handling the bare unit, it is forbidden to lift the power cord shield and the water inlet and outlet connectors. They cannot be used as load-bearing supports. Please refer to Section 2.3 to know the locations of the wire shield and the water inlet and outlet connectors.

3.4. Unit Installation

Tools required for installation (not provided with the machine): Phillips screwdriver, standard screwdriver, knife, vacuum pump, wire stripper, pressure gauge, flaring tool, etc.

⚠ Caution

- Non-professionals are not allowed to enter. The cabinet must be locked to ensure that non-professionals cannot access any part of the unit.
- The product needs to be installed in a place without direct sunlight.
- There must be sufficient space for installing the unit. There should be no obstructions within 500 millimeters in front of the unit and on the air outlet side.
- There should be no flammable items near the chiller unit around the cabinet. ◦

1) The chiller unit adopts an integrated design. Components such as the compressor, condenser, plate heat exchanger, throttling device, control module, internal circulation water pump, and fan are integrated. Before

leaving the factory, the pipelines have been assembled. The refrigerant has been added according to the standard, and the unit has been debugged and measured. There is no need to refill the refrigerant at the installation site.

2) The chiller can be installed on the ground or elevate installation . If the installation is elevated, the bracket needs to meet the load-bearing requirements: load-bearing >300kg.To ensure the normal operation of the chiller, no items should be placed at the external circulating air inlet of the chiller to block the air flow. The air duct flow direction of the chiller is shown in Figure 3-1.

3) During installation, fix both sides of the unit with 4×M5 bolts. For other connecting pipes and important dimensions, please refer to Section 2.3.



Figure 3-1 Schematic Diagram of the Air Flow Path of the Chiller Unit

4. Electrical Connection

4.1. Power Supply Connection

After the mechanical installation is completed, the power cord of the chiller should be connected. Please refer to Table 4-1 for the electrical specifications. Read the precautions carefully before installation:

⚠ Warning

- Electrical connections must be made by trained professionals.
- When connecting the power cord, it is prohibited to operate live.
- If the voltage is too high, it may damage the chiller. Please make the connection according to the voltage requirements specified on the nameplate.
- To avoid any destructive effects, the unit must be reliably grounded before powering on.
- All electrical connections must comply with national and local electrical code requirements. Before installation, disconnect the power supply of all units.
- The wires must not come into contact with copper pipes, compressors, motors or other moving parts.
- The manufacturer will not be responsible for problems caused by unauthorized internal wiring changes.
- After the power cable is connected, it must not be loose.
- The specification of the unit's power cord is UL2586, and the cable is flame-retardant.

Table 4-1 Electrical Specifications

Power Supply	Maximum Allowable Voltage Fluctuation Range	Maximum Line Current of the Unit	Recommended Air Switch Specification	Recommended Leakage Current Protector Specification	Minimum Specification of the Copper Core Wire Diameter of the Power Cord
480V 3~60Hz	±10%	7.4A	Type D 12A	30mA	4*12AWG

The electrical schematic diagram of the system is as follows：

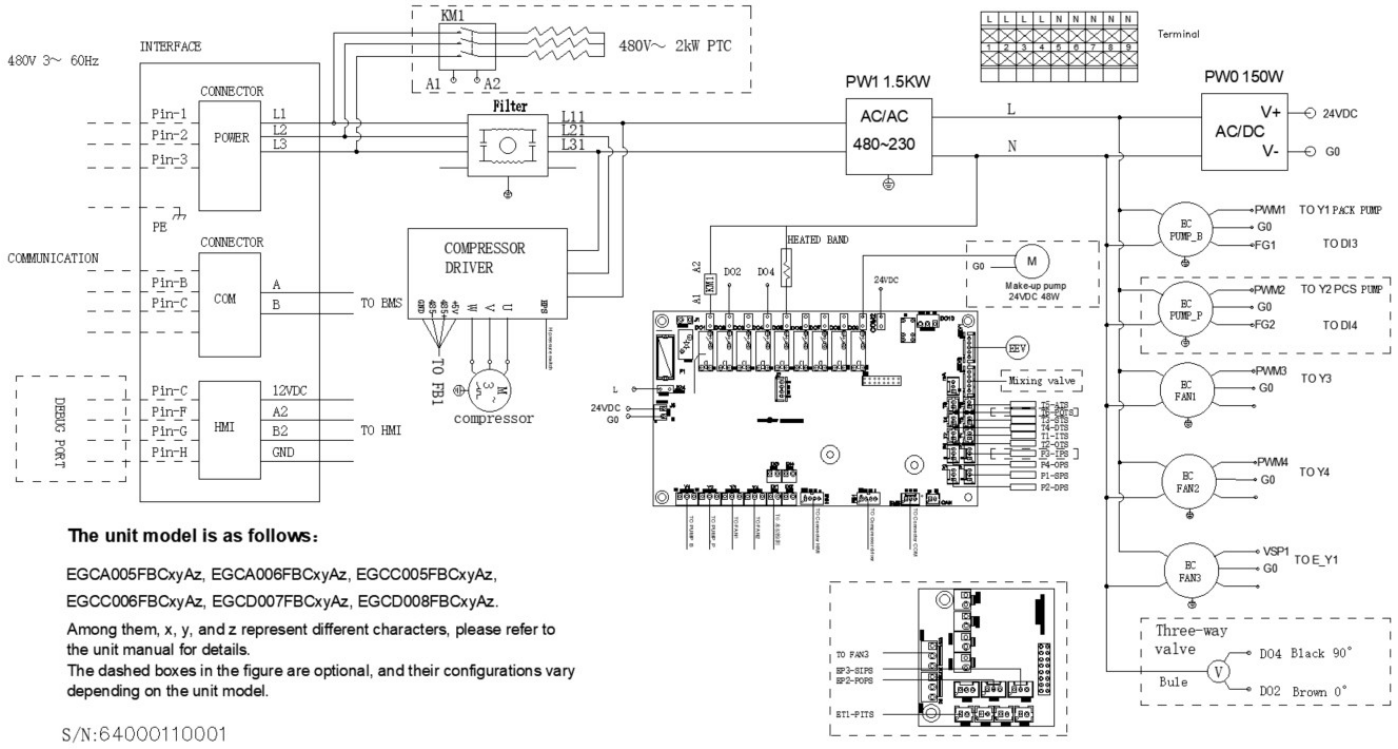

Figure 4-1 Electrical Schematic diagram

4.2. User-side Wiring

（1） The user-side wiring instructions for the units are shown in Figure 4-1, Figure 4-2 and Figure 4-3.

	Unit Side	User Side	
Connector Model	RTS714N3PHEC03	RTS6BS14N3SHEC03	
Schematic Diagram Brand: Amphenol	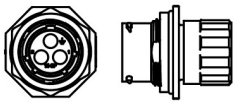		
Pin Position	1	2	3
Pin Definition	User Power In L1	User Power In L2	User Power In L3

Figure 4-2 Power Supply Wiring

	Unit Side			User Side		
Connector Model	RTS710N6PHEC03			RTS6BS10N6SHEC03		
Schematic Diagram Brand: Amphenol	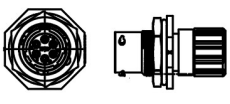			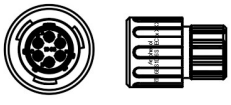		
Pin Position	A	B	C	D	E	F
Pin Definition	/	RS485A	RS485B	/	/	/

Figure 4-3 Host Computer Wiring

	Unit Side				User Side			
Connector Model	GR01208SN-U				GR61208PNHEC-U			
	SS-2016T-Y01				SP-2016T-Y01			
Schematic Diagram Brand: Gvtong	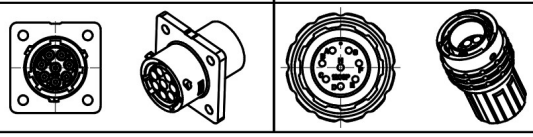							
Pin Position	A	B	C	D	E	F	G	H
Pin Definition	/	/	Debug Port	/	/	Debug Port	Debug Port	Debug Port

Figure 4-4 Debugging Port Wiring

（2）The ground wire inlet for the units.

The unit has reserved M5*10 internal threaded holes for external grounding.

⚠ Caution

- Confirm that the front-end power supply is disconnected before wiring.
- Check the product specifications: Before wiring, confirm that the model of the quick connector used matches the application requirements.
- Clean the interface: Before connection, ensure that the interface of the connector is clean and free of debris to avoid poor contact caused by contamination.
- Correct sequence: Connect the cables in the order required by the instruction manual, ensure the correct polarity, and avoid short circuits or damage.
- Tighten the connection: When connecting, ensure that the connection is firm (you can hear a "click" sound), but do not use excessive force to avoid damaging the connector.
- Insulation treatment: Ensure that all wiring points are well insulated to avoid the risk of leakage or short circuits.
- Moisture and water protection: If the connector will be used in a humid environment, ensure that the connector used has moisture-proof and waterproof functions, or take additional protective measures (such as applying sealant).
- Test the connection: After completing the wiring, conduct a test to ensure that the current is transmitted normally and the connector works properly.

- Regular inspection: Regularly check the status of the connector, and promptly detect and handle potential problems.

5. Unit Commissioning

5.1. Vacuuming of the Water System

⚠ Caution

- Users need to prepare their own vacuum pump and pressure gauge.
- When evacuating, the vacuum pump must not lose power, otherwise the lubricating oil in the vacuum pump may be sucked into the system.

1) Use pipes to connect the vacuum pump and the pressure gauge to the charging port of the chiller unit.
2) Open the liquid injection ball valve and start the vacuum pump to evacuate.
3) After completing the vacuuming, the liquid injection ball valve must be closed first, and then the power switch of the vacuum pump should be turned off.

5.2. Coolant Filling

When the chiller unit is first connected to the cooling equipment, the water-side circulation system needs to be charged with coolant to ensure the normal operation of the chiller unit.

5.2.1. Automatic Liquid Replenishment of the Unit

1) Connect the operation panel to the communication/debugging port of the unit, check the power connection of the chiller unit, and power on the chiller unit.
2) Unscrew the automatic exhaust valves on the unit and the external connecting pipeline (a hose should be used for connection to avoid liquid splashing), and fill the make-up water tank with liquid to the high point of the sight glass.
3) As shown in Figure 5-1, click the liquid injection mode on the control panel to execute the liquid injection. At this time, the liquid replenishment pump is turned on. During the process, the make-up water tank needs to be refilled with liquid several times to maintain the liquid level in the sight glass slightly above the middle.
4) When the return liquid pressure is greater than or equal to 140kPa, the make-up water pump is turned off, the circulating water pump is turned on, and the liquid level of the make-up water tank is continuously increased to the high point of the sight glass.
5) Forcefully open the electric three-way valve. After running for 5 minutes and the pressure stabilizes, close the electric three-way valve. Repeat this process at least twice.

6) The unit maintains the liquid injection mode for more than 30 minutes to achieve the purpose of exhausting air.

7) After the air exhaust is completed, observe the return liquid pressure. The return liquid pressure should be around 120kPa. When the deviation exceeds 20kPa, it is necessary to correct it by replenishing or draining the liquid.

⚠ Caution

- During the air exhaust process, the control panel can be unplugged, and the liquid can be added to other units continuously.
- Before the unit is powered off, replenish the liquid level in the make-up water tank to the high point of the sight glass as required.

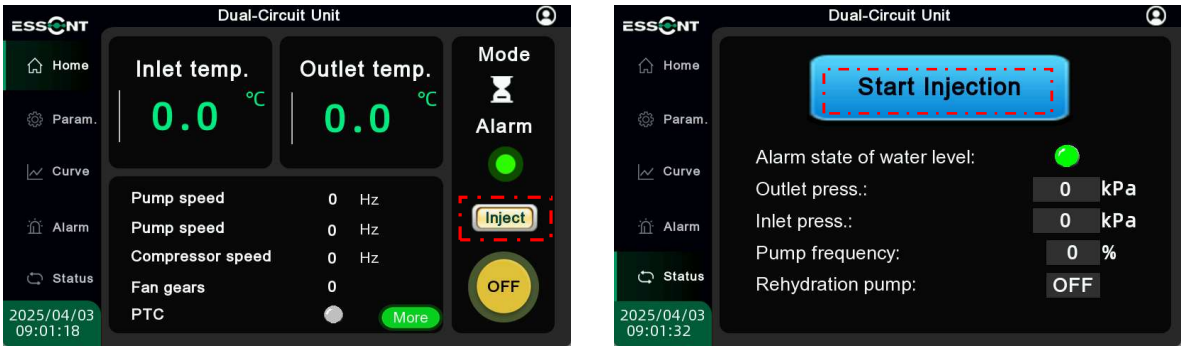

Figure 5-1 Schematic Diagram of the Operation of the Control Panel

5.2.2. Liquid Replenishment with Conventional Tooling

When the chiller unit is not equipped with an automatic liquid replenishment function, the charging operation is carried out through an external liquid replenishment tooling. The details are as follows:

1) Prepare the liquid replenishment tooling (such as the replenishment pump equipment and suitable pipelines), and connect it to the charging port of the unit.

2) Connect the operation panel to the communication/debugging port of the unit, check the power connection of the chiller unit, and power on the chiller unit.

3) Loosen the automatic exhaust valves on the unit and the pipeline (a hose should be used for connection to avoid liquid splashing), find the charging port of the chiller unit and open the ball valve of the charging port, as shown in Figure 5-2.

4) Check the power connection of the liquid replenishment tooling, turn on the liquid replenishment pump, and charge the chiller unit with coolant.

5) Observe the return liquid pressure on the battery side of the unit. When the return liquid pressure on the battery side is greater than or equal to 140kPa, close the ball valve of the charging port immediately and then turn off the liquid injection tooling.

6) Forcefully open the three-way valve, run it for 5 minutes and then close the electric valve. Repeat this process at least twice. Observe again whether the return liquid pressure on the battery side of the unit reaches 120kPa. If there is a deviation, replenish the liquid again.

7) Adjust the unit mode to "self-circulation" (in this mode, only the water pumps on the battery side and the PCS side are running). Start the unit and let it run for more than 30 minutes to achieve the air exhaust effect.

8) After the air exhaust is completed, observe the return liquid pressure. The return liquid pressure should be around 120kPa. When the deviation exceeds 20kPa, it is necessary to correct it by replenishing or draining the liquid.

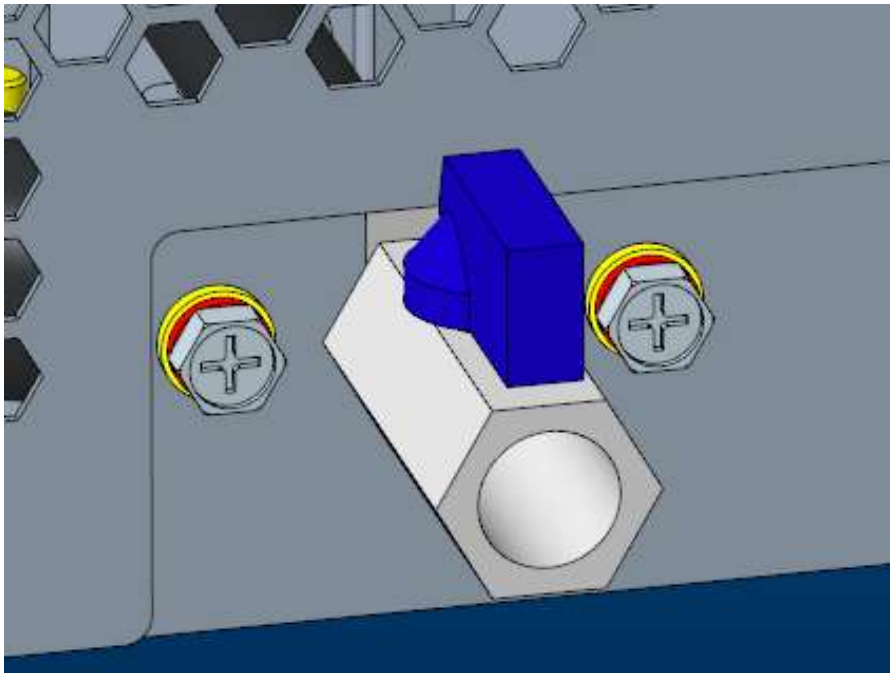

Figure 5-2 Schematic Diagram of the Charging Port

⚠ Warning

- Do not strike or roll the power cord of the liquid supply pump, and do not use it as a lifting rope. During the operation of the liquid supply pump, do not pull the power cord casually to avoid electric shock caused by damage to the power cord.
- When the liquid replenishment tooling is in operation, a safety warning sign "Slight danger. People and animals are not allowed to enter" should be set up on the ground to prevent accidents.
- If the user fails to estimate the running time of the replenishment pump and thus cannot complete the operation of replenishing the coolant at one time, please replenish the coolant multiple times according to the actual situation.
- Some liquid replenishment tooling is equipped with a check valve. After the liquid replenishment is completed, there is still coolant in the pipeline between the check valve and the chiller unit. When disassembling this pipeline, please be careful not to let the coolant in the pipeline spill onto the ground or other equipment.

⚠ Warning

- The quality of the coolant must be regularly monitored and treated to ensure that precipitation and corrosion can be avoided even under extreme conditions.
- During the long-term use of the chiller unit, the coolant may contain mechanical impurities, high-hardness substances, chemical impurities, biological impurities, slime bacteria, and algae. Therefore, the coolant in the water machine system must be tested, purified, and maintained every 12 months.
- Ethylene glycol is a substance that can contaminate groundwater. Equipment operators must comply with relevant national regulations on the protection of groundwater resources.
- Use a specially configured ethylene glycol solution.

5.3. Refrigerant Charging

This product has been charged with sufficient refrigerant when leaving the factory. When a refrigerant leakage occurs, it is necessary to find the leakage point and reconnect or repair and weld the leakage point. When repairing or reconnecting the leakage point, it must be ensured that there is no refrigerant or other pressure in the system. Otherwise, during the

welding process, the refrigerant pressure or other pressure is likely to cause the copper pipe to burst, resulting in injury to the operator.

After the leakage repair is completed, the system needs to be retested for leakage and pressure retention. Only after successfully retaining the pressure and ensuring that there are no new leakage points can the system be evacuated again and charged with refrigerant according to the system requirements. When a refrigerant leakage occurs in a small space, to prevent suffocation of personnel, all ventilation openings should be opened first, or forced ventilation should be carried out to discharge the refrigerant, and then relevant operations can be carried out.

If the refrigerant leakage is caused by long-term use of the equipment or problems during installation and transportation, please perform the following operations:

5.3.1. Vacuum Drying

Vacuum drying is to use a vacuum pump to exhaust the gas in the pipeline, and also discharge the moisture out of the pipeline in the form of steam.

1) Remove the valve cap of the fluorine charging port, and connect the fluorine charging port with the compound pressure gauge and the vacuum pump using an auxiliary pipe.
2) Start the vacuum pump to evacuate the unit and the connecting pipeline. When the vacuum degree in the unit and the pipeline is lower than 20 Pa, close the on-off valve, stop the operation of the vacuum pump, and let the system stand for half an hour. If the vacuum degree does not rise back to 60Pa after half an hour, it is considered qualified. Otherwise, it indicates that there is moisture or an air leakage in the pipeline.
3) Perform the refrigerant charging operation. For details, please refer to Section 5.3.2.

5.3.2. Refrigerant Charging

After the unit has been repaired for the refrigerant system and evacuated, the unit needs to be charged with refrigerant according to the charging amount indicated on the nameplate of the unit. The specific operations are as follows:

1) Close each valve of the compound pressure gauge, remove the vacuum pump, replace it with a charging tank, connect the charging pipe, and exhaust the air. Connect the joint of the charging pipe of the charging tank properly, and place the cylinder mouth downward on the electronic scale.
2) Set the dose to be charged on the electronic scale, open the charging tank valve and the compound pressure gauge valve in sequence to charge the refrigerant into the system. When the specified amount is reached, immediately close the charging tank valve, and then remove each connecting pipe.
3) If the amount of refrigerant charged is less than the rated value on the nameplate, when it is necessary to supplement the refrigerant after starting the machine, the refrigerant should be charged on the suction side.

⚠ Warning

- When searching for or detecting refrigerant leaks, never use any method that may cause a fire source.
- If a leak is suspected, all open flames should be removed or extinguished.
- If local and national regulations do not allow the discharge, the refrigerant should be recovered into the correct recovery cylinder.
- The outlet of the vacuum pump should not be close to any potential ignition source, and there should be ventilation available.
- After the refrigerant charging is completed, an electronic leak detector or soap bubbles should be used to detect air leaks at the pipeline connections.
- When charging, refrigerant cylinders of non-azeotropic mixed working media such as R410A/R454B/R513A need to be inverted (refrigerant cylinders with siphons do not need to be inverted).
- For refrigerant charging, the additional refrigerant to be charged must be qualified. Otherwise, it may damage the compressor or expose you to other risks.
- When charging the refrigerant, the refrigerant valve should be opened slightly so that the refrigerant in the refrigerant cylinder enters the system slowly in a gaseous state to prevent liquid hammer.

5.4. Unit Startup

Please refer to the following steps to start the unit:

1) Check through the controller screen that the inlet and outlet water temperatures, pressure, ambient temperature, voltage, etc. of the unit are displayed normally.
2) Power on the unit and start the chiller unit, and observe whether there are any abnormal alarms.
3) After the refrigeration function is turned on, let the unit run for 5 minutes, and check the operation status of the compressor, fan and water pump.

⚠ Caution

- Do not modify the parameters without the guidance of a professional. Improper parameter modification may trigger frequent unit protection, resulting in the unit not being able to work properly.
- When the unit is in the heating mode and stops running in winter, do not turn off the main power switch of the unit. Otherwise, the anti-freeze function of the unit will fail, which may cause the pipeline to freeze and crack.

- The filter in the water system needs to be cleaned at least once a year.
- Regularly check the water system to check whether the air exhaust and water replenishment of the water system are normal.
- Ensure that the water temperature meets the requirements of the operation range.

6. Operation Instructions of the Controller

During the maintenance of the unit, operations can be carried out through the controller. The control panel displays information through the screen, and parameters can be set by touching the screen. The screen can display key information, the system operation mode, set values, and alarm information. Users can change the refrigeration or heating mode and set values to operate the system. This chapter introduces the menu operations and control features.

Taking the EGCD008FBCCACA operation screen as an example, other models may have slight differences

6.1. Touch Screen

The parameter settings of the unit, alarm records, alarm history, system operation status, etc. can all be displayed by touching the screen.

6.2. Home Page Interface

After powering on, the system initializes and enters the normal display interface. The initialization interface is shown in Figure 6-1. After clicking "Enter the Main Interface", it will jump to the main interface.



Figure 6-1 System Initial Interface Diagram

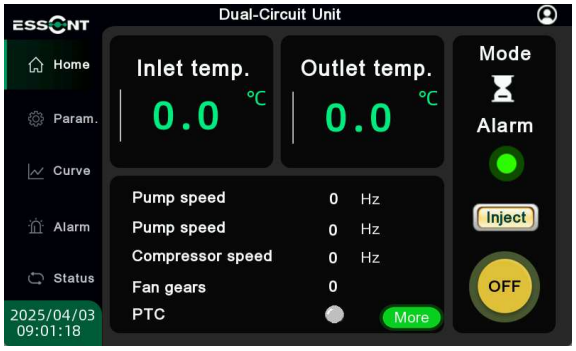

Figure 6-2 System Main Interface

The system main interface is shown in Figure 6-2. On the main page, click the circular button in the lower right corner to perform the power on/off operation. "Powered Off" indicates that the unit has not been started, and "Powered On" indicates that the unit has been started. Above the power on/off button, there are the unit mode and alarm indication. The unit modes are: self-circulation, refrigeration, heating, and standby. The alarm status only indicates the total alarm, and specific alarms can be viewed by entering the "Alarm" sub-menu. The main interface can display information such as the current outlet water temperature and return water temperature of the running unit, the operation status of the main components, and the real-time clock. The specific icon descriptions are shown in Table 6-1.

Table 6-1 Explanation of the Display on the System Main Interface

Icon	Explanation
	Power on/off of the unit. Clicking can change the power on/off status: ON for startup; OFF for shutdown.
	Click the logo to view the company information.
	Different levels have different password logins. User Name: User 1 Password: 1234 User Level User Name: User 2 Password: 8000 Maintenance Level
	Current date/time.
	The current display shows the temperature of the coolant entering and leaving the PACK side
	Liquid injection button. The interface can only be entered after logging in at the maintenance level. It is generally used for the first installation and daily maintenance.
	System operation mode icon. Displays the current operation mode of the system, which are: 0-standby, 1-refrigeration, 2-heating, 3-self-circulation.
	Indication of the unit alarm status. A green light indicates no alarm, and a red light indicates an alarm.
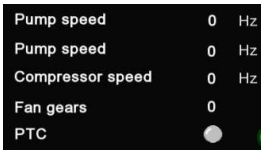	Operating status of the main components. It includes the status display of the compressor, circulating pump, and fan.

	System home page icon. After clicking, the screen interface enters the system home page interface, where you can view the current time, the current operation mode, the outlet water temperature, the return water temperature, the alarm status, and the working status of the main components of the unit, and perform power on/off operations.
	Parameter menu icon. Click the parameter menu icon to enter the sub-menu interface, which includes user parameters, maintenance parameters, factory parameters, clock settings, network settings, and password management. Different parameter settings require different levels of login passwords.
	System operation curve icon. After clicking, you will enter the system operation record interface, which includes operation data and curves. Click "Curve" to enter the curve interface, and click "Next" and "Previous" to switch the interface.
	Alarm menu icon. You can view the current faults, the triggering and elimination times, the fault causes corresponding to the fault codes, and the historical fault information.
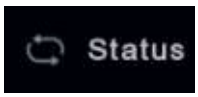	Operating status icon.

6.3. Parameter Interface

The menu of the parameter interface includes user parameters, maintenance parameters, manufacturer parameters, clock settings, network settings, password management, etc. (as shown in Figure 6-3).

6.3.1. User Parameter Interface

Click the icon  in the upper right corner of the screen, and then enter the login interface (as shown in Figure 6-4). Select the account "user1" and enter the password "1234" to enter the user parameter interface (as shown in Figure 6-5), which includes the setting of the unit mode and the setting of the refrigeration and heating parameters.

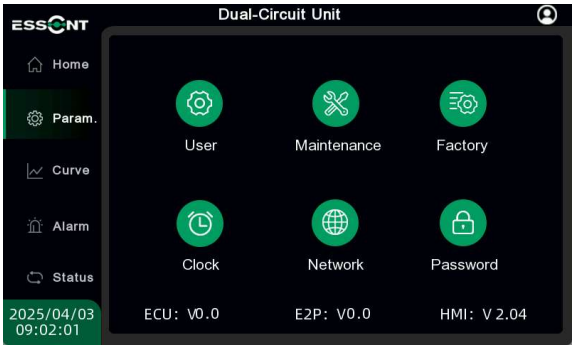

Figure 6-3 Parameter Interface

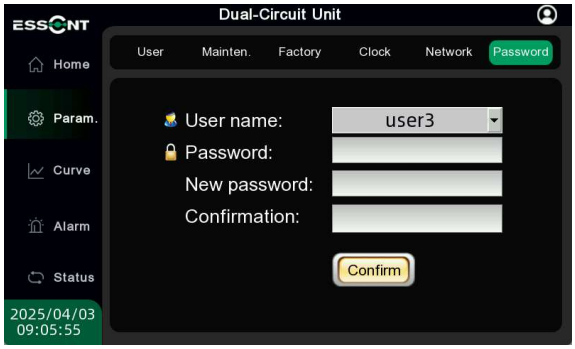

Figure 6-4 User Login Interface

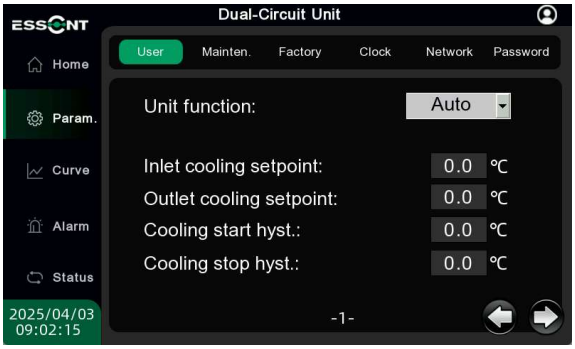

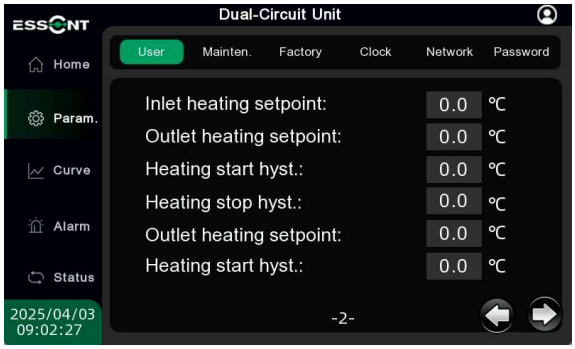

Figure 6-5 User Parameter Interface

6.3.2. Maintenance Parameter Interface

Select the higher-level account "user2" in the login interface and enter the corresponding password "8000" to enter the maintenance parameter interface (as shown in Figure 6-6). It is mainly for the setting points of components such as valves, pumps, fans, and compressors.

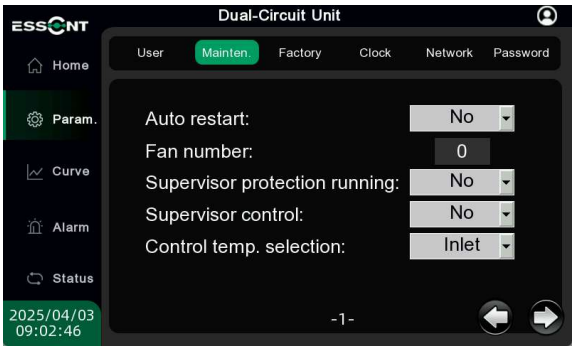

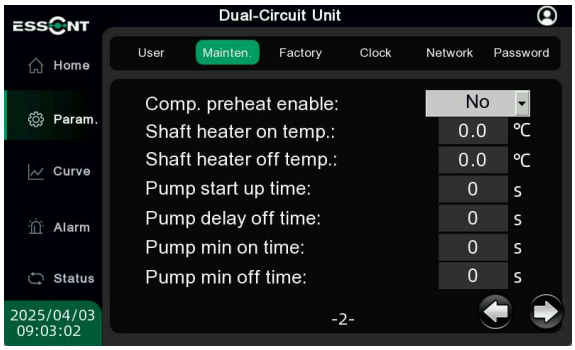

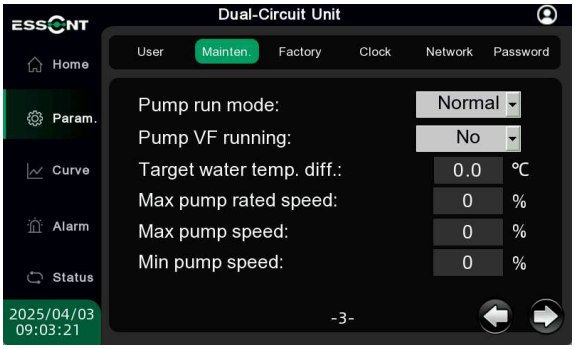

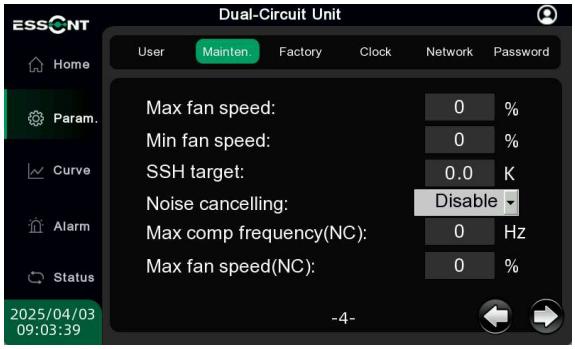

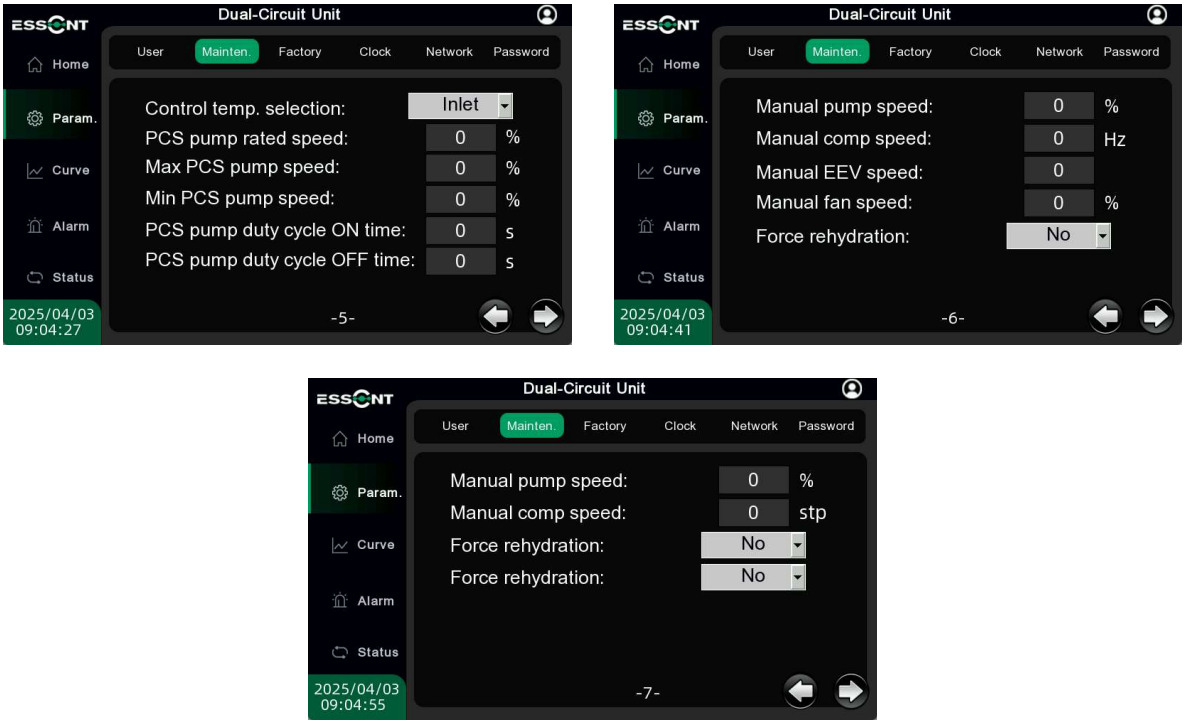

Figure 6-6 Maintenance Parameter Interface

6.3.3. Manufacturer Parameter Interface

The parameters in this menu are only open to personnel authorized by the manufacturer. For details, please consult the technicians of Essent.

6.3.4. Clock and Language Interface

This menu not only has the function of a real-time clock but also has the function of language switching. You can modify the time and switch between Chinese and English.

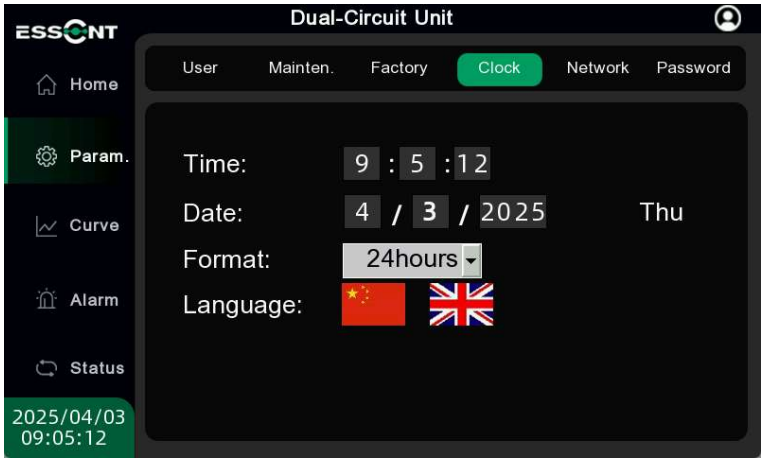

Figure 6-7 Clock and Language Interface

6.3.5. Network Parameter Interface

Network parameter settings can be modified in this menu.

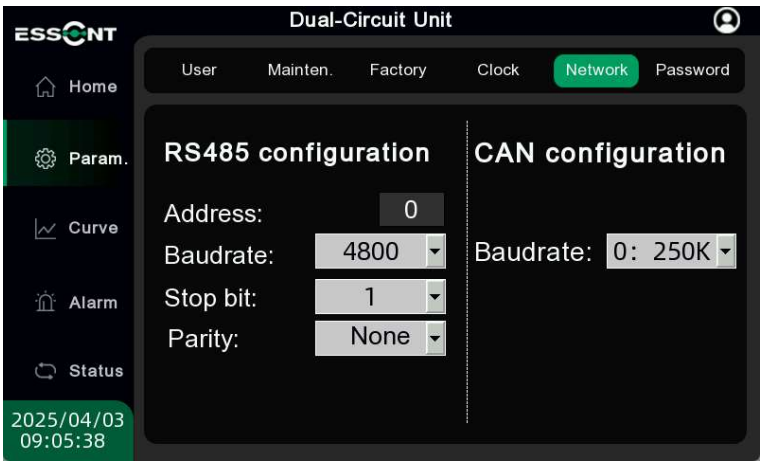

Figure 6-8 Network Parameter Interface

6.3.6. Password Setting Interface

User passwords can be set in this menu.

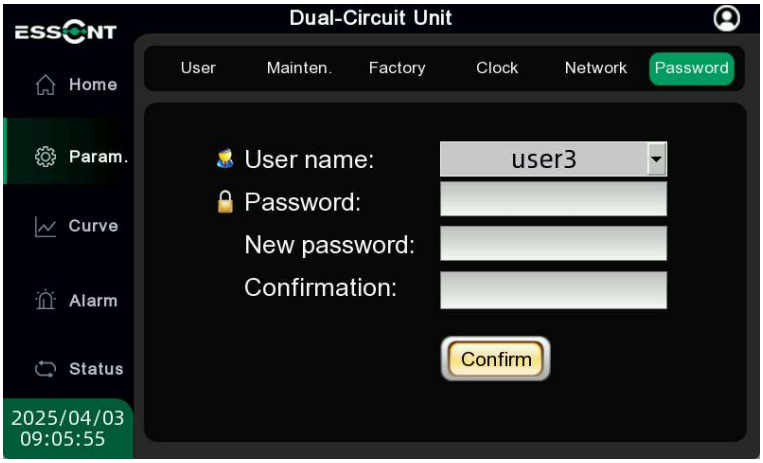

Figure 6-9 Password Setting Interface

6.4. Curve Interface

Click the button 

to view the temperature and pressure curves as well as the operation data of the fan, compressor, etc. (as shown in Figure 6-10), and the recording time is about one week.



Figure 6-10 Curve Interface

6.5. Alarm Interface

Press the button 

to enter the alarm shielding function. All active alarms will be displayed, and you can also switch to the alarm history (as shown in Figure 6-11).

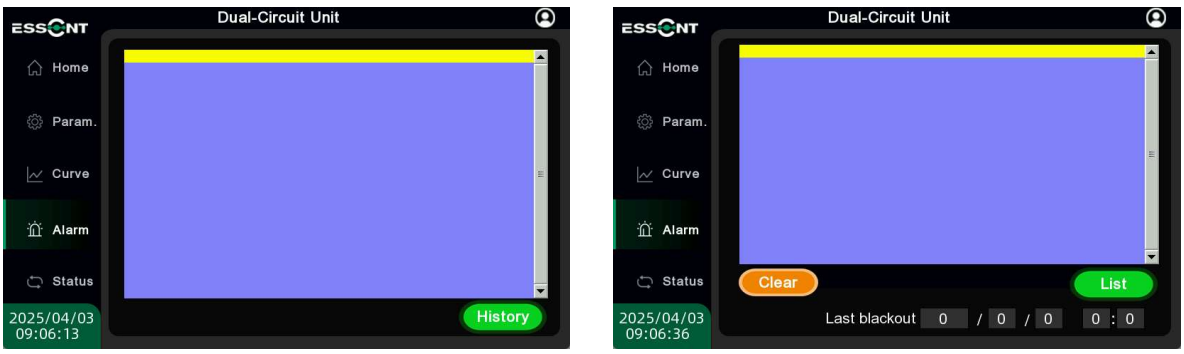

Figure 6-11 Alarm Interface

The fault descriptions corresponding to the alarms are shown in the following table. When an alarm occurs, you should query the cause and handling measures according to the corresponding fault description, or contact the after-sales personnel in a timely manner.

Table 6-2 Fault Description List

Index	Fault Alarm Description	Possible Reasons	Suggested Handling Measures
1	Environmental temperature sensor failure	The electrical wiring of the temperature sensor is loose or the cable is damaged.	Tighten the electrical control wiring or replace the cable.
		The temperature sensor is damaged.	Replace the temperature sensor.
2	Pack - side return water temperature sensor failure	The electrical wiring of the temperature sensor is loose or the cable is damaged.	Tighten the electrical control wiring or replace the cable.
		The temperature sensor is damaged.	Replace the temperature sensor.
3	Pack - side outlet water temperature sensor failure	The electrical wiring of the temperature sensor is loose or the cable is damaged.	Tighten the electrical control wiring or replace the cable.
		The temperature sensor is damaged.	Replace the temperature sensor.
4	System return water pressure sensor failure	The electrical wiring of the pressure sensor is loose or the cable is damaged.	Tighten the electrical control wiring or replace the cable.
		The pressure sensor is damaged.	Replace the pressure sensor.

5	Pack - side return water pressure sensor failure	The electrical wiring of the pressure sensor is loose or the cable is damaged.	Tighten the electrical control wiring or replace the cable.
		The pressure sensor is damaged.	Replace the pressure sensor.
6	Pack - side outlet water pressure sensor failure	The electrical wiring of the pressure sensor is loose or the cable is damaged.	Tighten the electrical control wiring or replace the cable.
		The pressure sensor is damaged.	Replace the pressure sensor.
7	Suction temperature sensor failure	The electrical wiring of the temperature sensor is loose or the cable is damaged.	Tighten the electrical control wiring or replace the cable.
		The suction temperature sensor is damaged.	Replace the suction temperature sensor.
8	Discharge temperature sensor failure	The electrical wiring of the temperature sensor is loose or the cable is damaged.	Tighten the electrical control wiring or replace the cable.
		The discharge temperature sensor is damaged.	Replace the discharge temperature sensor.
9	Suction pressure sensor failure	The electrical wiring of the pressure sensor is loose or the cable is damaged.	Tighten the electrical control wiring or replace the cable.

		The suction pressure sensor is damaged.	Replace the suction pressure sensor.
10	Discharge pressure sensor failure	The electrical wiring of the pressure sensor is loose or the cable is damaged.	Tighten the electrical control wiring or replace the cable.
		The discharge pressure sensor is damaged.	Replace the discharge pressure sensor.
11	PCS - side return water temperature sensor failure	The electrical wiring of the temperature sensor is loose or the cable is damaged.	Tighten the electrical control wiring or replace the cable.
		The temperature sensor is damaged.	Replace the temperature sensor.
12	PCS - side outlet water temperature sensor failure	The electrical wiring of the temperature sensor is loose or the cable is damaged.	Tighten the electrical control wiring or replace the cable.
		The temperature sensor is damaged.	Replace the temperature sensor.
13	Pack - side return water pressure sensor failure	The electrical wiring of the pressure sensor is loose or the cable is damaged.	Tighten the electrical control wiring or replace the cable.
		The pressure sensor is damaged.	Replace the pressure sensor.
14	Pack - side outlet water pressure sensor failure	The electrical wiring of the pressure sensor is	Tighten the electrical control wiring or replace the cable.

		loose or the cable is damaged.	
		The pressure sensor is damaged.	Replace the pressure sensor.
15	System high - voltage alarm (switch)	The ambient temperature is too high.	Check the outdoor ambient temperature.
		The electrical wiring of the high-voltage switch is loose or the cable is damaged.	Tighten the electrical control wiring or replace the cable.
		The condenser of the unit is dirty.	Clean the condenser.
		The air outlet and return air inlet are blocked.	Unblock the air outlet and return air inlet of the unit.
		Check whether the condensing fan is operating normally.	Repair or replace the external circulation fan.
		The refrigerant is overcharged.	Recover an appropriate amount of refrigerant.
16	Water pump failure	The electrical wiring of the water pump is loose or the cable is damaged.	Tighten the electrical control wiring or replace the cable.
		Air is mixed into the coolant of the internal circulation of the chiller unit, or the water pump idles due to the absence of coolant.	Check the coolant in the unit and increase the air exhaust.

		The pump body is burned out.	Check the water pump and replace it immediately if it is found to be burned out.
17	System discharge superheat is too low	The electronic expansion valve is faulty with an excessive opening.	Replace the electronic expansion valve.
		The coolant flow is too small.	Supplement the coolant.
		There is an excessive amount of refrigerant.	Recover an appropriate amount of refrigerant.
		The suction temperature sensor or the low-pressure sensor is faulty, resulting in inaccurate monitoring.	Check whether the suction temperature sensor and the low-pressure sensor are damaged. If so, replace them in a timely manner.
18	System suction pressure is low	The refrigerant leaks.	Check the leakage point and supplement the refrigerant after repair.
		The electronic expansion valve is operating abnormally.	Replace the electronic expansion valve.
19	System discharge pressure is too high	The condenser is dirty.	Clean the condenser.
		The air inlet and outlet are blocked.	Keep the air inlet and outlet air ducts unobstructed.
		The condensing fan has an operation failure.	Check whether the condensing fan is faulty. If so, replace it in a timely manner.
20	System discharge temperature is too high	The ambient temperature is too high.	Check the outdoor ambient temperature.
		The condenser is dirty.	Clean the condenser.
		The air inlet and outlet are blocked.	Keep the air inlet and outlet air ducts unobstructed.

		The condensing fan has an operation failure.	Check whether the condensing fan is faulty. If so, replace it in a timely manner.
21	System pressure ratio is too high	The condenser is dirty.	Clean the condenser.
		The air inlet and outlet are blocked.	Keep the air inlet and outlet air ducts unobstructed.
		The condensing fan has an operation failure.	Check whether the condensing fan is faulty. If so, replace it in a timely manner.
		The refrigerant is overcharged.	Recover a small amount of refrigerant.
		The compressor is malfunctioning.	Replace the compressor.
22	System pressure ratio is too low	The compressor speed is too low or component wear leads to an increase in the internal leakage of the compressor.	Replace the compressor.
		There is a refrigerant leakage.	Check the leakage point and supplement the refrigerant after repair.
		The electronic expansion valve is faulty with an excessive opening.	Replace the electronic expansion valve.
23	System leakage failure	The pipeline fittings are cracked.	Replace the copper - pipe system or carry out welding treatment.
		The sealing parts are aged.	Replace the sealing parts.
		The equipment is cracked by impact (condenser, evaporator, etc.).	Replace the cracked equipment (condenser, evaporator, etc.).
24		Low voltage.	Adjust the voltage to the normal range.

	Compressor drive over - current protection	There is a grounding or short - circuit in the output circuit of the inverter.	Check the output circuit and eliminate the fault.
		The compressor is damaged.	Replace the compressor.
25	Compressor drive over - temperature protection	High ambient temperature.	Reduce the ambient temperature.
		The air - flow of the driver's radiator is insufficient.	Clean the cooling air duct of the compressor inverter.
		Clean the cooling air duct of the compressor inverter.	Replace the compressor driver.
26	Pack - side outlet water temperature too low protection	The water - outlet temperature sensor is faulty.	Replace the water - outlet temperature probe.
		The electric heater or the internal circulation water pump is faulty.	Check the electric heating tube and the internal circulation water pump.
		The heat leakage of the client load exceeds the designed heating capacity of the chiller.	Check the heat leakage of the client load.
27	Pack - side water pressure too low protection	Coolant level is low.	Add coolant.
		The expansion tank is leaking air.	Check the expansion tank. If there is a leak, refill the air in time or replace the expansion tank.

28	Pack - side water pressure too high protection	There is a blockage in the water circuit system.	Check the blockage situation on the water system side (filters, valves, elbows, etc.).
		There is an excessive amount of coolant.	Open the drain valve and discharge a small amount of coolant.
29	Pack - side water temperature difference too high protection	The temperature sensor is faulty.	Replace the water temperature sensor.
		The flow rate is too low.	Increase the water flow rate.
		The client load increases.	Check the load of the equipment to be cooled.
30	Compressor drive off - line	The host computer is malfunctioning.	Check the connection cables of the host computer.
		The communication wiring of the frequency converter is loose or the cable is damaged.	Tighten the communication wiring or replace the cable.
		The communication parameter settings are incorrect.	Set the communication parameters correctly.
31	Compressor drive failure	The drive board is abnormal.	Replace the frequency converter.
		The input voltage of the frequency converter is not within the specified range.	Adjust the voltage to the normal range.
32	PCS - side water pressure too high protection	There is a blockage in the water circuit system.	Check the blockage situation on the water system side (filters, valves, elbows, etc.).
		There is an excessive amount of coolant.	Open the drain valve and discharge a small amount of coolant.
33	PCS - side water pressure too low protection	The coolant is insufficient.	Add coolant.

		The expansion tank is leaking air.	Check the expansion tank. If there is a leak, refill the air in time or replace the expansion tank.
34	PCS - side water temperature too high protection	The water outlet temperature sensor is faulty.	Replace the water outlet temperature sensor.
		The internal circulation water pump or the external fan is operating abnormally.	Check the internal circulation water pump and the external fan.
		The heat generation of the client load exceeds the designed cooling capacity of the chiller unit.	Check the load of the equipment to be cooled.
		There is a liquid leakage in the water system.	Check the leakage point and supplement the coolant after repair.
		The control of the mixing valve fails or the valve body is faulty.	Check whether the opening of the mixing valve is normal. Otherwise, replace the valve.
35	Host computer off - line failure	The communication cable is damaged.	Replace the communication cable.
		The connection of the communication - line port is wrong.	Re - connect the communication line.
		The communication baud rate of the chiller is different from that of the host computer.	Set the chiller and the host computer to use the same communication baud rate.

36	Pack - side water temperature too high protection	The water outlet temperature sensor is faulty.	Replace the water outlet temperature sensor.
		The compressor, electronic expansion valve, internal circulation water pump or external fan is operating abnormally.	Check the compressor, electronic expansion valve, internal circulation water pump and external fan.
		The heat generation of the client load exceeds the designed cooling capacity of the chiller unit.	Check the load of the equipment to be cooled.
		There is a liquid leakage in the water system.	Check the leakage point and supplement the coolant after repair.

The above alarm information is the most comprehensive. Some models do not have corresponding functions, so the corresponding alarm information is not available.

6.6. Operation Interface

Press the button 

to view the operating status of components such as the unit's fans, water pumps, and compressors (as shown in Figure 6 - 12).

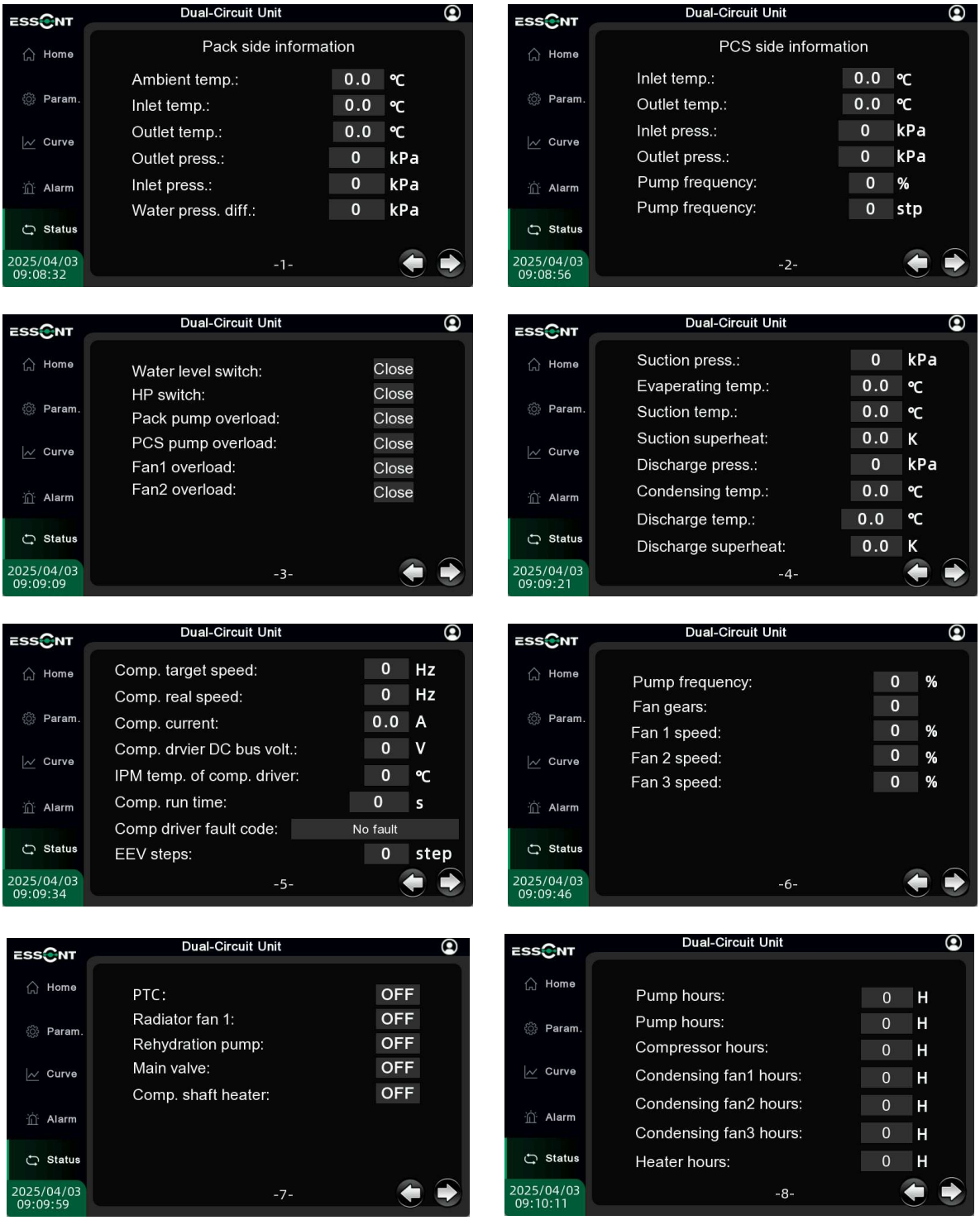

Figure 6-12 Operating Interface

7. Fault Maintenance

7.1. Fan Faults

Phenomenon	Possible Causes	Inspection Items or Handling Methods
External circulation fan does not operate	a）The chiller unit is not powered on. b）Due to lightning strike, the circuit breaker trips.	a）Check if there is power at the power input terminals of the chiller unit. b）Check if the circuit breaker inside the chiller unit is closed.
	The power input of the chiller unit is abnormal, such as over - voltage and under - voltage.	Connect to the display via Modbus communication to determine if there are corresponding alarms in the chiller unit and correct them.
	The chiller unit is in standby mode.	Under normal circumstances, after the chiller unit is powered on, it enters the automatic control logic after a 30 - second standby state.
	The fan is stuck.	Check if there are foreign objects blocking the fan.
	The terminal connection is loose.	Check if the connection terminals of the fan are loose.
	The compressor has not started.	The external fan can only start after the compressor starts.
The external circulation fan makes abnormal noises	The fan bearing is worn out.	Replace the fan.
	The fan blade scrapes against other objects.	Check if there are cables interfering with the fan blade.

7.2. Refrigeration System Faults

Phenomenon	Possible Causes	Inspection Items or Handling Methods
Compressor fails to start	No power supply (in standby mode).	Check the main power switch and ensure that the operation display interface is turned on.
	Loose electrical connections.	Tighten the electrical connectors.
	Compressor motor burned out.	Inspect the motor and replace it immediately if any faults are found.

Compressor does not operate	No refrigeration demand.	Check the outlet water temperature display and the compressor output status on the operation interface.
	Shutdown delay.	Under normal circumstances, the compressor has a minimum shutdown time. If the temperature rises to the startup point again during this period, the compressor will still have a delayed startup.
High discharge pressure	Dirty and blocked condenser.	Clean the condenser.
	External circulation fan not working.	Refer to the fan fault handling methods in Section 7.1.

7.3. Water System Faults

Phenomenon	Possible Causes	Inspection Items or Handling Methods
The water pump fails to start	No power supply (in standby mode).	Check the main power switch and ensure that the operation display interface is turned on.
	Loose electrical connections.	Tighten the electrical connectors.
	Pump body burned out.	Inspect the water pump and replace it immediately if it is found to be burned out.
The heater does not work	No heating demand.	Check whether the outlet water temperature and the heating set point are reasonably set.
	Loose electrical connections.	Tighten the electrical connectors again.
	Heater burned out.	Inspect the heater and replace it immediately if it is burned out.

7.4. Inspection and Cleaning of the Condenser

To ensure the efficient operation of the condenser, there should be no fallen leaves, cotton fluffs, insects, slag shells, and other pollutants on its outer layer. If there is dirt on the condenser, it will not only increase power consumption but may also lead to excessively high operating pressure of the system, machine failures, and shutdowns.

If the condenser needs to be cleaned, blow compressed air from the inside out in the direction opposite to the normal air flow during the unit's operation, parallel to the aluminum foil heat exchanger. For external cleaning, a vacuum cleaner can be used. Do not damage the aluminum foil heat exchanger. During the cleaning process, be careful not to be scratched by the fins.

The condenser can also be cleaned with a brush or a water gun. When cleaning with a water gun, rinse the condenser from the inside out. If the tube rack is too dirty, contact professional cleaners.

⚠ Warning

- The edges of the condenser blades are sharp. Please wear gloves during operation.
- Never clean the condenser with steam. Otherwise, the internal pressure will rise, and the refrigerant will leak from the safety valve. ◦

7.5. Inspection and Cleaning of the Evaporator

Please regularly check the inlet and outlet water temperatures of the evaporator and compare them with the saturated evaporation temperature during refrigeration. For an effective evaporator during refrigeration, the difference between the average inlet and outlet water temperature and the saturated evaporation temperature of the refrigerant should be 3 - 4°C. If the difference exceeds this range, it indicates that the working efficiency of the heat exchanger has decreased.

Since some chemical treatments are required during the process of cleaning the heat exchanger, the cleaning work must be carried out by professional personnel.

7.6. Refrigerant and Lubricating Oil Charging

Each piece of equipment is charged with an appropriate amount of refrigerant and the corresponding lubricating oil. If the refrigeration cycle system is operating normally and there is no need for maintenance or other servicing work, do not arbitrarily refill or replace the refrigerant and lubricating oil. Under normal circumstances, the refrigerant and lubricating oil in the machine can be used as is. If it is necessary to recharge the refrigerant due to a leak, please consult Essent technicians.

7.7. Routine Maintenance

Routine maintenance and servicing work should be carried out by qualified professional personnel. In order to ensure the normal operation of the unit, extend its service life and reduce the likelihood of failures, please regularly perform the following on-site inspection items, make adjustments and necessary maintenance, and keep records, which will help maintenance personnel diagnose the faults of the unit.

Inspection Items	At Initial Installation	Once Every Six Months	Once a Year
Cooling System			
Whether there is abnormal noise	○	○	
Whether there is leakage	○	○	
Whether the pump is operating normally		○	
Check the coolant filter			○
Check the coolant concentration			○
Check the water level of the make-up water tank		○	
Check the pressure of the expansion tank		○	
Mechanical System			
Clean or replace the air filter		○	
Check whether there is abnormal noise		○	
Refrigerant System			
Check whether the pressure is within the normal range			○
Clean the condenser		○	
Electrical Control System			
Check whether the wiring harness terminals are loose			○
Check whether the terminals on the control panel and the driver are loose			○
Check the insulation condition of the equipment			○

8. Environmental Protection

8.1. Names and Contents of Hazardous Substances in the Product

Table 8-1 List of Hazardous Substances in the Unit

Component Name	Component Name					
	Lead (Pb)	Mercury (Hg)	Cadmium (Cd)	Hexavalent Chromium Cr Cr(VI)	Polybrominated Biphenyls (PBB)	Polybrominated Diphenyl Ethers (PBDE)
Compressor	×	○	×	○	○	○
Heat Exchanger Core	○	○	○	○	○	○
Filter	○	○	○	○	○	○
Fasteners such as Screws and Bolts	○	○	○	○	○	○
Sheet Metal	○	○	○	○	○	○
Thermal Insulation and Shock Absorbing Blocks	○	○	○	○	○	○
Plastic Parts	○	○	○	○	○	○
Foaming Materials	○	○	○	○	○	○
Rubber Parts	○	○	○	○	○	○
Power Cables and Connection Wires	×	○	○	○	○	○
Printed Circuit Boards and Electronic Components	×	○	×	○	○	○
Printed Copies	○	○	○	○	○	○
Controller Categories (Controllers/Batteries, etc.)	×	○	×	○	○	○
Others	○	○	○	○	○	○

This table is compiled in accordance with SJ/T 11364.

○：Indicates that the content of hazardous substances in all homogeneous materials of this component is lower than the limit specified in GB/T 26572.

×： Indicates that the content of hazardous substances in at least one homogeneous material of this component exceeds the limit specified in GB/T 26572; however, given the current technical conditions, it is temporarily impossible to achieve a situation where the product components are completely free of the above-mentioned hazardous substances. With the progress of alternative technologies, the content of hazardous substances will gradually decrease.

8.2. Treatment Before the Unit is Disabled

Before carrying out this procedure, technicians must be fully familiar with the equipment and all its details, and all refrigerants should be safely recovered. Before performing the task, samples of oil and refrigerant should be taken in case analysis is required before the recovered refrigerant is reused. There must be an available power source before starting the task.

1) Be familiar with the equipment and its operation.

2) Electrically isolate the system.

3) Before starting the commissioning procedure, ensure that:

① Mechanical handling equipment is available for handling refrigerant cylinders if necessary;

② All personal protective equipment is available and used correctly;

③ The recovery process is always supervised by relevant technicians;

④ The recovery equipment and cylinders meet the standards.

4) Evacuate the refrigerant system as much as possible.

5) If evacuation is not possible, fabricate a manifold so that the refrigerant can be removed from all parts of the system.

6) Ensure that the cylinder is placed on the scale before recovery.

7) Start the recovery machine and operate according to the instructions.

8) Do not overfill the cylinder (no more than 80% of the volume filled with liquid).

9) Do not exceed the maximum working pressure of the cylinder even for an instant.

10) When the cylinder is correctly filled and the process is completed, ensure that the cylinder and the equipment are removed from the site in a timely manner, and all isolation valves on the equipment are closed.

11) The recovered refrigerant can only be charged into another refrigeration system after it has been cleaned and inspected.

8.3. Recovery Labels

The unit should be labeled to declare that it has been disabled and the refrigerant has been emptied. The label should be dated and signed. For equipment containing flammable refrigerants, ensure that there is a label on the equipment indicating that the equipment contains flammable refrigerants.

8.4. Unit Recovery

The recovery equipment should be in good working condition, and there should be a set of readily available operation instructions for the equipment, which should be suitable for the recovery of flammable refrigerants. If in doubt, consult the manufacturer. In addition, there should be a set of calibrated scales, and the scales should be in good working condition. The hoses should be equipped with leak-free disconnect fittings and be in good condition. The recovered refrigerant should be handled in the correct recovery cylinders according to local regulations, and relevant waste transfer forms should be arranged. Do not mix refrigerants in the recovery unit, especially in the cylinders. If it is necessary to remove the compressor or compressor oil, ensure that they have been evacuated to an acceptable level to ensure that no flammable refrigerant remains in the lubricant. The compressor body should not be heated with an open flame or other ignition sources to accelerate this process. When draining the oil from the system, safety must be maintained.

8.5. Environmental Protection and Safety Warnings

The following wastes are classified as hazardous wastes, and the property owners should dispose of them in accordance with the relevant regulations of the local environmental protection department. Please refer to Table 8-2.

1) Waste refrigerant oil (HW08 waste mineral oil and mineral oil-containing waste 900-219-08) generated during the maintenance, replacement, and disassembly of refrigeration compression equipment;
2) Spent acid generated from pickling (HW34 spent acid 900-300-34).

Table 8-2 Categories of Hazardous Wastes and Disposal Methods

Category	Disposal Method
Cast iron and steel parts	Recyclable
Copper products	Recyclable
Aluminum products	Recyclable
Refrigerant	Recovered by qualified suppliers
Refrigeration oil	Handled by hazardous waste disposal suppliers
Rubber products	Handled by hazardous waste disposal suppliers
Electronic components	Recycled by enterprises specializing in waste electronic and electrical appliances

⚠ Caution

Please abide by the following rules. Any violation may cause irreversible damage to the equipment:

- If it is necessary to add refrigerant, please contact our designated after-sales service agency for confirmation;
- Do not add any additives to the refrigeration system;
- After the compressor is burned out, the refrigerant oil and refrigerant must be replaced;
- When inspecting and repairing the water system, please consider whether there are additives such as ethylene glycol in the system, and ask a qualified supplier to handle it.
- When inspecting and repairing the refrigerant system, please ask a qualified supplier to handle the refrigerant and refrigerant oil in the system.
- When scrapping equipment or components, please consider the impact on environmental resources and ask a qualified supplier to handle it.